I 29.86/4: D 37/V.2

FEDERAL PUBLICATION

Final
Cultural Landscape Report
Volume 2

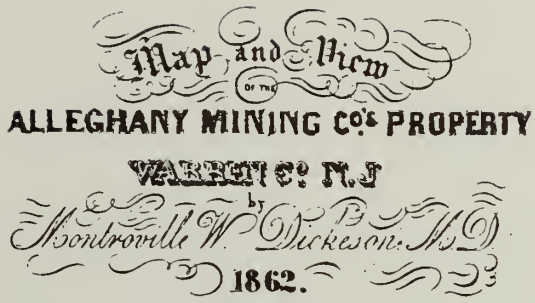

ALLEGHANY

Pahaquarry Copper Mine

DELAWARE WATER GAP

National Recreation Area • New Jersey

PUBLIC DOCUMENTS
DEPOSITORY ITEM
DEC 21 1995
CLEMSON
LIBRARY

D-0800-96

Printed on recycled paper

Final
Cultural Landscape Report
Volume 2

August 1995

by
Steve R. Burns Chavez
A. Berle Clemensen

Pahaquarry Copper Mine
DELAWARE WATER GAP
National Recreation Area • New Jersey

United States Department of the Interior • National Park Service • Denver Service Center

Digitized by the Internet Archive
in 2012 with funding from
LYRASIS Members and Sloan Foundation

http://archive.org/details/finalculturallan02chav

TABLE OF CONTENTS

APPENDIXES 1

APPENDIX B: Dickeson, Montroville Wilson. *Report of the Geological Survey and Condition of the Alleghany Mining Company's Property, Warren County, New Jersey, with Map and Drawing*. Philadelphia: J. B. Chandler, 1862. 5

APPENDIX C: Keith, Nathaniel S. "New Methods in the Metallurgical Treatment of Copper Ores." *Journal of the Franklin Institute*. 160(August 1905) 147-155. 17

APPENDIX D: W.M.M. "Pahaquarry Copper Mine, Warren County, New Jersey." War Minerals memomrandum. College Park, Md: United States Department of the Interior, Bureau of Mines, August 1942. 19

APPENDIX E: Cornwall, H.R. "Pahaquarry Copper Mine, Pahaquarry, New Jersey." Washington, D.C.: United States Department of the Interior, Geological Survey, June 1943. 27

APPENDIX F: Woodward, Herbert P. "Pahaquarry Mine." Trenton, N.J.: State of New Jersey, Department of Consevation and Development, 1944. 43

APPENDIX G: Reeve, Stuart A. and J. Sanderson Stevens. "Phase I Archeological Investigations at the Pahaquarry Copper Mines Parking Area, Delaware Water Gap National Recreation Area, Warren County, New Jersey." West Chester, Pa: Prepared for the National Park Service by John Milner Associates, Inc., December 1992 53

APPENDIX H: United States Bureau of Mines. "Stabilization Plan at Pahaquarry Copper Mines Delaware Water Gap National Recreation Area." Denver: United States Bureau of Mines, November 1993. 95

APPENDIX I: Coastal Environmental Services, Inc. "Vegetation Mapping and Analysis Pahaquarry Copper Mine Site Delaware Water Gap." Princeton, N.J.: Prepared for the National Park Service by Coastal Environmental Services, Inc., January 1994 173

APPENDIX J: Stein, Raymond, J. "A Rare Fauna/Habitat Survey of the Pahaquarry Copper Mines Development Site in the Delaware Water Gap National Recreation Area, Pahaquarry Township, Warren County, New Jersey." Far Hills, N.J.: Prepared for the National Park Service by Biostar Associates, Inc., September 1993. 263

APPENDIX K: Additional Historic Photographs 277

APPENDIXES

APPENDIX A

Printed in Volume 1

APPENDIX B

Dickeson, Montroville Wilson. *Report of the Geological Survey and Condition of the Alleghany Mining Company's Property, Warren County, New Jersey, with Map and Drawing.* Philadelphia: J. B. Chandler, 1862.

The property, the subject of this report, is situated on the Delaware River, in Warren County, New Jersey, than which there can be no more healthful location anywhere. The topographical features, at the point where the copper-lode outcrops, and immediately contiguous to it, are peculiarly indicative of the special purpose for which it was thrown up, as, otherwise, either on the score of productiveness or value, it would have been a decided failure. It is, truly, a very bold and rugged mountainous portion of the immediate country, receding to, and terminating in, a very pleasing and productive soil.

It contains by titles in fee and mineral right upward of a thousand acres, about thirty of which, partly cleared, fenced, and susceptible of high cultivation, with a good dwelling-house thereon, originally erected with reference to, and the convenience of, miners, and located near the river, has lately been acquired by purchase. And, as it is bounded several hundred feet on the river, the desirable facilities are thus possessed for improvements, and the receipt and shipment of whatever may be necessary in the business of mining for copper-ore.

"Mine Brook," so called, winds its way through this portion of the property, which embraces a very fine mill site, formerly occupied as such. Upon it are two dams which, with the race they were designed to supply, are so well preserved, that they can be restored to their original perfection and usefulness by a small expenditure; and a perpetual supply of an abundance of water, which thus flows at all seasons of the year, will afford ample power for driving all the stamps and supplying all the buddles that may be required to prepare, for market, the ore it may be necessary to manufacture in this way.

The very large body of contiguous mountain land, densely covered with forest, will furnish, at very low cost, an inexhaustible supply of timber for mining purposes and fuel.

The neighboring country is well improved and richly agricultural, thus rendering the supplies of the necessaries of life abundant and cheap.

The facilities of transportation are, by the Delaware River to Philadelphia, and by canals or railroads, a distance of about a hundred miles to either New York or Philadelphia. The open navigation of the Delaware river for a large portion of the year will, however, of itself, afford every requisite facility for sending the mineral products of this property to market, while the cost of not exceeding a dollar per ton, designates it not only as the natural, but very valuable outlet.

I commenced the geological survey of the property at an opening or drift, designated as No. 1, (see map,) started a short distance above the second dam, on the west side of "Mine Brook," and about three hundred feet below the shaft on the brow of the hill. This old drift, that penetrates the solid shale for a hundred feet, with an opening of about eight feet

in diameter, curves, in its direction, at a distance of about two-thirds of its extreme length, and decreases in size. The vein averages about five feet in width, the copper-ore being very perceptible in its dissemination throughout the vein-stone. The idea of curve, or change in direction, in this level, was evidently for the purpose of striking the shaft, hereafter first described, and which was, undoubtedly, simultaneously commenced with the drift. It was not reached, however, owing to the erroneous calculation relative to the dip of the vein. The walls, here, so far as they can be traced from the opening, are well-defined, and all the appearance therewith connected clearly indicated a true copper-vein, which this drift has been of but little service in developing; though, ultimately, when mining is prosecuted to the extent which the property invites and warrants, it will be of great service, not only as an air-channel, by a level opening to the working for upward of three hundred feet above and some two hundred feet below, – ventilation for five hundred feet of shafting in the aggregate, – but as an outlet for the ore from above. Hence, though this work anticipated the necessity for it as to time, and failed in the purpose of which it was undertaken, it really adds to the value of the property now.

Drift No. 2, (see map,) about one hundred and twenty-five feet above that I have been describing, is started on the same side of "Mine Brook," on the outcrop of the vein, which is about five feet in width. Here, the vein-stone was simply removed for a certain distance, when the direction was changed: further progress was made, when another change of direction ensued, and thus it was driven till the distance, in the aggregate, of about a hundred feet, was attained. The walls are regular, and the dip of the vein is at an angle of 45°. Owing to the great length of time this drift has remained undisturbed, the sides had become so foul, from the accumulation of debris of various kinds, that it precluded a critical examination, hence, definite conclusion relative to the distribution of copper-ore in the vein-stone, though all developed indications in relation to it, exhibited the green appearance incident to the presence of carbonate of copper.

On the same side of the ravine at a further height of about forty feet, in an indentation of the elevation, I came to an old shaft, an opening I shall designate as No. 3, (see map) sunk to the depth of forty feet, and directly on the slope of the vein. The vein-stone has been merely removed from between the walls, which are perfectly smooth. The south wall is slightly tinged by the contiguous shale, with an ash color, which deepens into a dark brown. The vein is about seven feet in width, dips at an angle of 40°, and it exhibits traces of copper-ore from the top of the shaft down to the extreme depth, and from which some ore must have been taken. The sinking of this shaft was a wholly useless expenditure, which, had it been applied to drifting on the vein, and stoping upward, would have been attended with much satisfactory results.

Still further up, some fifteen feet on a retiring line from the last described shaft, designated as opening No. 4 (see map) and undoubtedly the first opened on the property, a shaft is sunk to the depth of about forty feet, by simply removing the vein-stone. The vein here is upward of six feet wide, with regular walls, and dips at an angle of 45°. At the bottom of the shaft a drift is started, which extends westward about six feet. The shaft exhibits very favorable indications of copper ore throughout its entire depth. This also was an useless expenditure, and with the sinking and driving previously described, in all some three hundred feet through hard rock, could not have been accomplished for a much less sum than five thousand dollars, when one properly located tunnel of one hundred and

twenty-five feet in length, would have more effectually developed the property, than all that has been done upon it.

Some forty feet above, immediately on the brow of the elevation, it being the third terrace from the river, a shaft seven by fifteen feet in diameter, designated as opening No. 5, (see map) was sunk to the depth of about twenty feet some fifteen years ago. It is started on the outcrop of the vein, by simply removing the vein-stone by blasting, and leaving the walls smooth and regular. The width of the vein is about six feet, and its course is 40° east of north, with a northerly dip. At my first examination, I discovered that ore had been cut at a depth of eight feet, appearing in bunches or patches, varying in size of a pea to a hen's egg, and at the bottom of its bed it bore the appearance of having been molded. That it was a point, where the value of the property for copper ore could be tested, did not admit of a doubt. The south wall has been partially removed, and a proper foundation has thus been obtained for the windless frame, now completed and covered with a good shed. An ore-house was also put up at my last visit, and miners are now vigorously and successfully at work in sinking. Copper ore is distinctly traceable in the shaft from the outcrop, and through the vein-stone down to its bottom. At the depth of eight feet, previously referred to, fully half a tone [sic ton] of the grey sulphuret of copper, averaging in mass thirty per cent., was taken out merely in the process of cutting away the walls to widen the shaft. This, at the depth, is a very unusual and extraordinary result, and several tons of ore equally as rich, and exposed to view, could be taken out by stoping.

From this shaft, on its south-west course, I found the vein thoroughly exposed, by its having been completely denuded of its shale covering for a distance of fifty feet, where a shaft, designated as opening No. 6, (see map,) fifteen feet in diameter, is started, but sunk only a few feet in depth.

About fifty feet further, on an outcrop line, the vein is again completely uncovered, and considerable work has been done on the back of the vein, longitudinally, in the form of an open cut, which is designated as opening No. 7, (see map). For about one hundred feet onward, the earth had been removed from the shale, which is of a deep reddish-brown color, thus presenting to view a complete arch, some fifteen feet in diameter, over the outcropping of the vein. From the open-cut No. 7, the vein is located in the immediate centre of the arch of the shale, which looms up to the gaze, like the huge back of an elephant – the Elephant's Back being the appellation I have affixed to it, in contrast with a similar, though smaller, extraordinary formation in Cornwall, England, known as, and denominated by the miners, the "Boar's Back." This phenomenon in structure or formation, is part of a grand and very remarkable natural development of a copper vein, which is really impressive of volume and value to a degree I have never before witnessed, and which, as an index, it seems to me, can not prove delusive.

The Centre of the Elephant's Back is perforated, which opening is designated as No. 8, (see map,) exposing to view a light ash-colored vein-stone, that shows small patches of copper-ore.

Some twenty-five feet further from the extreme point uncovered, on the line of the outcrop, another opening, No. 9, (see map,) about five feet in depth, is made in the shale; from the indications of which the covering is decreasing in thickness, and the vein itself is approaching the surface.

A further elevation of some thirty feet – the distance passed over on the outcrop of the vein, from opening No. 5, at the brow of terrace number three, being about two hundred feet – brings the survey up to the highest point of the outcrop, it being on the fourth plateau or terrace from the river. Approaching the brow of this elevation, and about ten feet to the right, a very fine view of the shale that covers the vein on the north side, which inclines at an angle of 45° down to the third terrace, followed up from opening No. 5, at the brow of the elevation, where it commences, is presented.

This natural roof or water-shed is the most perfect thing of the kind I have ever met with, being a dark chocolate color, and quite smooth and regular. I would remark, that this brown stone roof is not peculiar to this single point or location, but the description applies equally, from terrace to elevation elsewhere on the property, there being six or seven terraces which thus characterize the mountain from the base to its summit. Hence, an inexhaustible quantity of sound brown-stone for building purposes, whether required in blocks of ordinary or unusual dimensions, can be procured here. My impression is, that such a stone, with its perfection of quality, size of the blocks in which it can be had, and the facility of cheap transportation by the Delaware River to the towns and cities upon its margin, might be made a source of considerable revenue, particularly as it is so much used, and is not met by the competition of production with any similar article within the limits I have designated as a market for it. It struck me as a feature of probable value, and worthy of being referred to in the report of the property.

Resuming the survey on the fourth terrace, at a distance of about one hundred and forty feet on the outcrop from the last described opening, a small shaft, opening No. 10, (see map,) is sunk on the vein for determining its character at this point.

One hundred Seventy feet further, another prospecting shaft designated as opening No. 11, (see Map,) is sunk for the same purpose, and the vein is found to encroach slightly upon the roof or covering.

On a cross-line from this shaft midway of the roof, descending to the terrace below, a drift, designated as opening No. 12, (see Map,) is started southward, which passes through the shale and exposes the vein-stone.

About ninety feet beyond, the roof has been cut through, and a drift, designated as opening No. 13, (see Map,) of about ten feet in length, has penetrated the vein and altered shale. From this opening a cross-cut has been run about seventy-five feet, evidently for the purpose of finding a parallel vein, but without success.

On the 3rd terrace, at the base of the roof that covers the vein, thirty feet below its outcrop, and about six hundred feet from the brow of the hill, where it terminates in that direction, a shaft, opening No. 14, (see map,) ten feet in diameter and well timbered, is sunk to the depth of fifteen feet, evidently with the intent of reaching the vein at a distance of about fifty feet. This work is quite old, as shown by the style of timbering. From the appearance of the debris at its mouth, and the particles of copper ore thickly disseminated through the gangue, it may be that the vein has already been cut. This is now being tested and I have no doubt it will show the uninterrupted continuance of copper ore from the opening No. 5 at the brow of the terrace, for a distance of fully six hundred

feet. I have traced the outcrop of this vein on this property for nearly, if not quite, two and a half miles.

The extreme mineral height is approachable for all practical purposes by a winding road from the river, and a road has been constructed also up the ravine to the outcroppings of the vein on its side.

The extreme altitude of the mountain is upwards of a thousand feet, and it is covered with a luxuriant growth of heavy chestnut and white and black oak timber. The plateaus on the mountain portion of this property, embrace quite large bodies of land, the soil of which is good, and sufficiently level for agricultural improvements. A number of fair sized farms might be opened here, as the topographical features of the immediate country are such, that practicable roads might be opened down to the low-lands, and the timber, were it desirable to appropriate it in this way, would pay for the clearing the land. The great quantity of very fine timber on this property is of much moment, notwithstanding its paramount value for its copper ore.

On the north-east course of the vein, beyond "Minebrook," I bestowed but a superficial examination, sufficient, however, to warrant the opinion that it continues well defined in that direction, which is very clearly indicated by the openings upon it.

I cannot avoid the conclusion, that this property, from its location, facilities for cheap transportation, food and fuel, water power, and an abundance of very rich copper ore, is very valuable; and, if managed with the system and persistence with which the copper mines of older countries are conducted, it cannot but be made very productive and profitable, as its aggregate advantages are rarely equalled, if ever exceeded.

RESUMÉ

This property, containing by title in fee and mineral right, upward of a thousand acres, is situated on the Delaware River, about eight miles above the water-gap, in New Jersey. There is a good and convenient house on the premises, originally erected for the convenience of the miners. Several hundred feet of river-front will afford every convenience for improvements, and receipts and shipments, in connection with the operations of mining.

"Mine Brook," a never-failing stream of water, embracing two dams, which, with the race they were constructed to supply, can be restored to their former perfection and usefulness at a small expense, runs through the property, and will furnish ample power for preparing all the copper-ore it may be necessary to manufacture with stamps and buddles.

Timber, for mining purposes and fuel, abounds in profusion, and the rich agricultural resources of the immediate country, will render the necessaries of life abundant and cheap. The Delaware River affords every facility for sending the ores to market, and at a cost of not exceeding a dollar a ton to Philadelphia. There is, also, canal and railroad communication to either New York or Philadelphia.

My geological survey of the property commenced a short distance above the second dam on "Mine Brook," at an old drift, (No. 1, see map,) about three hundred feet below the brow

of the third terrace, which penetrates the solid shale for about a hundred feet, by an opening of about eight feet in diameter. The vein averages about five feet in width, the copper is plainly disseminated throughout the vein-stone, the walls are regular and will-defined, and every appearance indicates a true copper-vein.

Second drift, (No. 2, see map,) one hundred and twenty-five feet above, is started on the same side of "Mine Brook," on the outcrop of the vein, five feet in width. The dip of the vein is at an angle of 45°, and the walls are smooth and regular. All indications, here, are favorable, and the green appearance incident to the presence of carbonate of copper is general.

Forty feet above, on the same side of the ravine, at an indentation, an old shaft (No. 3, see map) is sunk, to the depth of about forty feet, on the slope of the vein. The vein is about seven feet in width, walls smooth and well-defined, dips at an angle of 40°, and traces of copper-ore are exhibited from the top to the bottom of the shaft.

Fifteen feet further up, on a retiring line from the last-described shaft, another shaft (no. 4, see map) is sunk, on the slope of the vein, to the depth of about forty feet. The vein is upward of six feet wide, dips at an angle of 45°, and the walls are smooth and regular. A drift is run, westward from the bottom of this shaft, about six feet. Everything is favorable here for copper-ore.

About forty feet above, at the brow of the third terrace, a shaft, (No. 5, see map,) 7x5 in diameter, was sunk to the depth of about twenty feet, fifteen years ago. The vein is about six feet in width, its course 40° east of north, and the walls are smooth and regular. Copper found here, in bunches or patches, at a depth of eight feet, thickly disseminated in the vein-stone, and at the bottom of its bed, as if it were molded. Here a windlass is erected, covered by a good shed, and miners are employed in sinking. In widening the shaft, half a ton of grey sulphuret, averaging thirty per cent., was taken out at a depth of eight feet, and a number of tons, in sight, might be procured by stoping.

From this shaft, (no. 5,) on a south west course, the vein is exposed for fifty feet, lengthwise, where a shaft (No. 6, see map.) fifteen feet in diameter, is sunk only a few feet. Fifty feet further, on the line of outcrop, the vein is again entirely uncovered, and considerable work has been done on the vein, longitudinally, in the form of an open cut (No. 7, see map.) For one hundred feet onward, the earth has been removed from the shale, which is of a deep reddish-brown color, presenting an arched covering, fifteen feet in diameter, to the outcropping of the vein, which is located in the immediate centre of the shale, and looms up like the back of an elephant, —"Elephant's Back" being the name I have given to it, there being a less extraordinary, but similar formation, in Cornwall, England, known as the "Boar's Back."

The centre of the "Elephant's Back" has been perforated, (opening No. 8, see map,) exposing a light ash-colored vein-stone, which shows small patches of copper.

Twenty-five feet further, on the line of the outcrop, from the point uncovered, another opening, (no. 9, see map,) five feet in depth, is made in the shale, which shows the shale is decreasing in thickness, and the vein approaching the surface.

A further elevation of thirty feet, and about two hundred feet from shaft No. 5, at the brow of the hill or terrace, reaches the highest point of the outcrop. From the brow of this elevation, about ten feet to the right, a fine view of the shale that covers the vein on the north side is presented, which inclines to the terrace below, at an angle of 45°.

This natural roof or water-shed is the most perfect thing of the kind I have ever seen. From terrace to elevation, elsewhere on this property, this remark will apply, there being some six or seven terraces from the base to the summit of the mountain, which will supply an inexhaustible quantity of superior brown-stone, that can be quarried out in blocks of ordinary or unusual dimensions. With the facility of cheap transportation by the Delaware River, it might be made a source of considerable revenue.

On the fourth terrace, at the distance of about one hundred and forty feet, on the outcrop, from the last-described opening, a small shaft (No. 10, see map) is sunk on the vein, for determining its character at that point.

One hundred and seventy feet further another prospecting shaft, No. 11, (see Map,) is sunk for the same purpose, and the vein encroaches slightly on the roof or covering.

On a cross-line from this shaft, midway of the roof, descending to the terrace below, a drift, No. 12, (see Map,) is started southward, which passes through the shale and exposes the vein-stone.

About ninety feet beyond the roof has been cut through, and a drift, No. 13, (see Map,) about ten feet in length, has penetrated the vein and altered shale. From this opening a cross-cut is run about seventy-five feet for reaching a parallel vein, but unsuccessfully.

On the third terrace at the base of the roof, thirty feet below the outcrop, and about six hundred feet from shaft No. 5, at the brow of the hill, a shaft, No. 14, (see Map,) ten feet in diameter wand well timbered, is sunk to the depth of fifteen feet. Sinking is commenced here, and the result I think, will show the continuance of copper ore from shaft No. 5, at the brow of the terrace to this point, a distance of fully six hundred feet. I have traced the outcrop of the vein on this property for nearly or quite two and a half miles.

The extreme mineral height on this property is approachable for all practical purposes, by a winding road from the river, and a road is also constructed up the ravine to the outcroppings of the vein, on its sides.

The extreme altitude of the mountain is upwards of a thousand feet, and it is covered with a luxuriant growth of heavy chestnut and black and white oak timber. The land is good, and susceptible of agricultural improvement. A number of good sized farms might be opened, and practicable roads made down to the lowlands. There are a number of unfailing springs of good cool water. This property is very valuable for its timber, but the paramount consideration is its fine copper ore.

On the north-east course of the vein, beyond "Minebrook," I bestowed but a superficial examination; enough, however, to warrant the opinion that it continues well defined in that direction, as clearly sustained by the openings upon it.

The colossal proportions of the outcrop on this property, its continuity and great extent, as clearly traced, the positive evidences of copper ore wherever it is opened, are conclusive proofs of value, which capital, a liberal charter, mining intelligence and system will establish, nature having done its part in relation to it with lavish liberality.

My surprise was excited that so much wealth, rearing its index so plainly and boldly to the view, should have remained latent or neglected so long a time; though the attempts heretofore made for its development, were not characterized with that comprehension and *persistence*, which are so essential for redeeming much of the mineral wealth of our country, from the stigma of sterility, so unjustly applied to it.

No country under the sun is richer in mineral wealth than our own, and nowhere has it been so badly treated or neglected. Taught the lesson, as we are now being, that the first duty of a nation is reliance upon its own resources for real wealth and independence, I think we can anticipate a better state of affairs for the future; for, instead of capital being almost exclusively used for burdening our people with the luxuries of foreign lands, more of it will find its way into the decidedly more profitable business of developing our mineral wealth, an element of immense profit and power to other countries, as we have experienced to our cost, and which we cannot much longer prudently neglect in our own country.

MONTROVILLE W. DICKESON
Economic Geologist
424 Walnut Street, Philadelphia, Pa.

Philadelphia, Dec. 20, 1861.

Philadelphia, January 11, 1862

Jesse Godley, Esq.,
President of Alleghany Copper Co.

I would remark relative to my visit of the 7th instant, [January 7, 1862] that the exploration at opening No. 14, resulted in finding the shaft as stated in my report, sunk to the depth of about fifteen feet, at the bottom of which, a small feeder from the main vein, makes its appearance and has been cut, yielding small patches of copper-ore, and thus sustaining my anticipations relative to the continuance of the copper-ore from shaft No. 5 to this point, a distance of about six hundred feet. Ten feet, additional, have been sunk through solid red-shale, proving its solidity and value as a building stone, and to within about ten feet of the main vein; the feeder from which, previously mentioned, being ample proof of the existence of the copper-ore at this point.

Satisfied with the result of this exploration, the mining force was placed back to shaft No. 5, where a depth of about forty feet has been attained. From a thorough examination of this shaft, by pick and gad, of fresh surfaces, I find, the copper-ore is exposed the whole distance from the tip to the bottom on the north side, across the bottom to the south side, and thence, up to the surface again.

On the north side of the shaft, at a depth of about twelve feet, the copper-ore widened to upwards of six inches, and continued downward about seven feet, when the width was somewhat contracted, but not interrupted. Stoping, if it were judicious, might be prosecuted profitably, but as there is not depth enough yet attained, to work upward to advantage, I could not advise it at this time.

Without any purpose of the miners, in collecting copper-ore, about a ton has been incidentally gathered in sinking the shaft, about half of which, is barreled, and which I have ordered to be sent down per the river, the first opportunity that offers.

Sinking is now duly commenced, and matters, otherwise connected with mining, have been so systematized that expenditure and progress can be clearly comprehended at any time, by the stockholders.

I have at my office, specimens of the continuous geology of the property, which arranged in their true relation to each other, show its real character and apparent value so far.

Very respectfully,
Yours, &c.,
M. W. Dickeson
424 Walnut Street

Philadelphia, April 12, 1862

Jesse Godley, Esq.,
President of Alleghany Copper Co.

On the 3rd of April instant, the period of my last visit to the Allegheny Mining Company's Property, I found that the shaft, opening No. 5, had been sunk to the depth of fifty-nine feet, showing copper both up and down, and without interruption the whole distance reached. Hence, the evidence thus afforded, relative to an abundance of copper ore on this property, as depth is attained, is conclusive to my mind – the appearances improving as downward progress is made – copper ore is now liberally and significantly distributed in the gangue. I deemed it best for the present, however, to continue the small force

employed in the sinking of the shaft, though stoping on the vein – very unusual at such a depth – might be prosecuted with success.

In conclusion, I will remark that this property involves no expensive machinery for pumping water or hoisting ore, the workings being above water-level, which cannot be reached in many years of active mining; consequently, every dollar of expenditure, instead of being an investment for preparation, will be rewarded by almost immediate and remunerating production. In fact, I never saw a mining property upon which so little expenditure was required to render it available as this. The repairing of the old dam and race on "Mine Brook," and putting up stamps and buddles, when deemed judicious to do so, for the manufacture of the poor or refuse ores, is all that is required to place mining here in successful operation, which, with the sinking and driving, embrace every necessary outlay; any further improvements to be properly deferred to subsequent ability derived from production, instead of, as is usual in the opening of a mine, running into large expenditures – wholly unnecessary on this property – in anticipation of what should be gradually reached and without involvement. With such a property and policy, I deem success certain.

Having satisfactorily accomplished the necessary geological determinations relative to the property, I now commit it, with entire confidence, to the management of the Company and the practical labor of the miner.

M. W. Dickeson

Chemical Laboratory, No. 108 Arch Street,

Philadelphia, May 17th, 1862.

Jesse Godley, Esq.,
President Alleghany Mining Company

Dear Sir:

The two samples of copper ore, which I have examined at your request, contain as follows:

No. 1.– 3 27/100 per cent. of Copper
No. 2.– 45 56/100 per cent. of Copper.

I remain Yours,
Very Respectfully,
F. A. Genth.

P.S.–No. 1.– Was the vein stone.
No. 2.– The average of the ore from the Alleghany Mine as you sent it.
F. A. Genth.

APPENDIX C

Keith, Nathaniel S. "New Methods in the Metallurgical Treatment of Copper Ores." *Journal of the Franklin Institute*. 160(August 1905) 147-155.

The following excerpt is Keith's description of his new method of refining copper.

Chalcocite, or copper glance, Cu_2S, when exposed to a like heat in an oxidizing atmosphere, as on the hearth of a roasting furnace, is decomposed; the sulphur partly distills off, and is partly oxidized to sulphurous acid, SO_2. The copper is first freed as a metal, and then rapidly oxidized to cupric oxide. If, then, the character of the flame and gases be changed to a reducing nature the copper oxide will be reduced and fused.

If *carbon*, such as coal, be ground or pulverized, and be projected into a flame in a furnace with free access of air, it immediately ignites and is oxidized to carbon monoxide and carbon dioxide. If the air be insufficient to furnish oxygen enough for the formation of dioxide only monoxide will be formed.

The air admitted with the powdered carbon may be sufficient to form at the first stage of the combustion only carbon dioxide, but as the action continues, the hot particles of carbon absorb half of the oxygen of the dioxide, reducing the latter to monoxide.

The atmosphere resulting from this operation consists of nitrogen, from the air, and carbon monoxide from the union of the oxygen of the air with the carbon. There are, also, small quantities of gaseous hydro-carbons, because of reactions due to the presence of water in the air and in the coal. This atmosphere of hot gases is ready to, and does, take oxygen from hot oxides, and thus reduce them to the metallic state.

The practical, working, furnace in which the several reactions above recited take place, consists of a vertical shaft about twenty feet high, constructed of red brick with a fire-brick lining.

At the top of this shaft are many holes, or openings, through which the powdered rock, powdered coal and flames from producer gas, or like fuel, are introduced. The bottom of the interior of the shaft is inclined at an angle of about 45 degrees, and this incline is extended into a dust-collecting chamber. The chamber, in turn, connects with another vertical shaft, also with an inclined bottom, dipping toward the other incline. The interior of this shaft is filled with pieces of coke, or small stones. This latter shaft is called the "condensing chamber." Near its top is a sprinkler to distribute water over the coke or stones, after the manner of a gas washer or scrubber. The draft for this furnace is produced by an exhaust fan through a pipe from the top of the condensing chamber. The draft is downward in the first shaft and upwards in the condensing chamber.

The operation by which copper, gold and silver are extracted from the silicious rocks is described as follows:

The rock, as it comes from the mine, is dumped from the cars into a crusher, or a series of crushers, which reduces it to sizes suitable for the pulverizers, into which it is

automatically fed, and in them reduced to powder. The fineness of this powder is determined by the diffusion of the copper mineral in the rock; and it should be so fine that the particles of rock and mineral are no longer coherent; but, of course, still mixed. The degree of comminution is measured by sieves, which may be as fine as sixty mesh, or finer, or coarser, according to the above requirement.

At some stage of this process of comminution finely pulverized coal, in weight about three per cent. of the rock, is intimately mixed with the powered rock, and the mixture is deposited in a hopper above the furnace shaft.

The draft and gas flames having been started, the comminuted mixture of rock and carbon is continuously fed into the holes at the top of the shaft, passing into the furnace with the flames and air. The particles of carbon and of copper mineral are immediately ignited and oxidized by the oxygen of the air in which the particles are suspended and diffused.

This oxidation is combustion, and produces an intense heat. At first the carbon particles have their surfaces oxidized to produce carbon dioxide; but as the particles pass further down the shaft the oxygen of the air supply becomes exhausted, and then the carbon dioxide parts with half of its oxygen to the unburned incandescent carbon to form carbon monoxide, which last, in its turn, acts upon the oxides of copper and silver, taking their oxygen, thus reducing them to the metallic state.

As the heat is intense, these particles of metal are melted and assume globular shape.

The gold particles are likewise fused. The heat does not fuse the silica nor the lime. The result of this operation is a sand carrying in it minute globular particles of copper, gold and silver.

The dust and condensible gases are collected on the wetted surfaces of coke or stone in the condensing chamber and washed by the water to the bottom, where the water also meets the sand and carries it out of the furnace, in a constant stream upon concentrators, which separate the sand from the metal particles.

The metallic concentrates are then dried, melted and cast into merchantable shapes; such as copper anodes, when there is enough gold and silver to pay for the expense of electrolytic refining and separation of the associated metals.

The process is a continuous one and automatic from start to finish. It is cheap; and under the economic conditions of the localities we have considered the cost does not exceed one dollar per ton on a scale of treatment of one hundred to two hundred tons per day of 24 hours.

The gas drawn from the furnace by the exhaust fan is a combustible one, consisting mainly of carbon monoxide and nitrogen, and may be used for heating purposes. The sulphur dioxide and carbon bisulfide, if any of the latter, are condensed in the chamber and pass off in the water.

APPENDIX D

W.M.M. "Pahaquarry Copper Mine, Warren County, New Jersey." War Minerals memomrandum. College Park, Md: United States Department of the Interior, Bureau of Mines, August 1942.

W.M.M.
August, 1942

Regional File No. 286

WAR MINERALS MEMORANDUM

UNITED STATES DEPARTMENT OF THE INTERIOR

BUREAU OF MINES

COLLEGE PARK, MARYLAND

PAHAQUARRY COPPER MINE
Warren County, New Jersey

-Copper-

W. M. M.
August, 1942

Regional File No. 286

WAR MINERALS MEMORANDUM 1/ 2/

UNITED STATES DEPARTMENT OF THE INTERIOR - BUREAU OF MINES

Report of the Bureau of Mines to Hon. Harold L. Ickes,
Secretary of the Interior.

THE PAHAQUARRY COPPER MINE
Warren County, New Jersey

- Copper -

SUMMARY

The Pahaquarry Copper Mine, in Warren County, New Jersey is the oldest mine worked by the white race in this country.

The copper, occurring chiefly as chalcocite in narrow sandstone beds, is found along seams and joint planes. Although it outcrops over considerable distances and over a vertical range of about 250 feet, the ore occurrence is spotty. The Pahaquarry Copper Mine offers little opportunity for the development of commercial copper and no further work is recommended by the Bureau of Mines.

1/ These memoranda present the facts reported by Bureau of Mines Engineers regarding the properties for which no further consideration is recommended. Therefore, they should be treated as confidential for the sole use of Bureau employees. They should not be given out to the public or to the owners of the properties concerned.

2/ The investigation was under the general supervision of Paul M. Tyler, Regional Engineer, Eastern Region. The examination of the property was made by G. D. Jermain, District Engineer for the states of Pennsylvania, Maryland, New Jersey and Delaware.

INTRODUCTION

The Pahaquarry Copper Mine was examined by an engineer of the Bureau of Mines on August 12, 1942.

The property is owned by the Boy Scouts of Trenton, New Jersey, and is located along the southwestern slope of Kittaning Mountain in Pahaquarry Township, Warren County, New Jersey.

HISTORY

In the early seventeenth century, some Dutch settlers from New York purchased a tract of land about 40 miles in length along the Delaware River just above the Delaware Water Gap. It was not long before the Dutch discovered the copper-bearing rocks and made several openings prior to 1660.

Since the original venture by the Dutch settlers, the mine has been worked intermittently, with no marked success by various companies. It is reported that many Pennsylvania and New Jersey inhabitants lost large sums in these ventures.

The mine was worked in 1847 and 1862 by the Allegheny Mining Company of Philadelphia. Some development work was done but no cheap method was found for extracting the low-grade ore.

In 1901, the Montgomery Gold Leaf Mining Company of Belvidere, New Jersey, acquired the mine. During the period 1905 to 1911, considerable work and money was put into the property under the direction of Dr. N. S. Keith. A double track tramway was built from the mine to the mill. A mill of 200 tons daily capacity was erected that incorporated several ideas of Dr. Keith. After a trial, this venture also failed and no attempts have been made to work the mine

since that date.

PHYSICAL FEATURES

The mine lies on the southwest flank of Kittanning Mountain. The topography is rugged and the mountain is cut by deep, narrow ravines. The Delaware River is located about half a mile west of the mine. Sufficient timber for all mining purposes is available on the property.

DESCRIPTION OF THE DEPOSIT

The ore-bearing beds crop out on the west side of a ravine, locally known as Mine Run, which opens on the Boy Scout Camp. This exposure is about 150 feet above the level of the Delaware River and the highest outcrop is about 250 feet above this.

The copper occurs in red and gray sandstones with interbedded shales. The strike of these beds in the vicinity of the mine is N.60°E. and dip 40° to 50° northwest. There is a slight flexure in the beds near the ravine but, in general, they have uniform dip and strike. That portion of the bed which is copper-bearing is composed of gray sandstone, varying in thickness from 2 to 6 feet, and is separated by reddish shale beds varying from 6 inches to 2 feet in thickness. The sandstone in places approaches a quartzite and its texture varies from fine to coarse. Copper-bearing sandstone is a member of the High Falls sandstone that forms a second ridge on the northwest flank of the Kittanning Range.

MINE WORKINGS AND PRESENT PLANT INSTALLATION

The ore was largely mined in the past by open pit methods along the highest outcrop. This was accomplished by stripping about 2000 feet to an average depth of about 40 feet. On the slope leading to Mine Run, several shallow shafts are located, but the workings are not extensive. In the ravine, an adit about 150 feet in length was driven into the mountain but did not disclose any extensive mineralization. At present only the foundations of the old mill and bin remain as visible evidence of former operations.

POSSIBLE RESERVES

Some accounts state that considerable copper ore still remains in this mine. However, all visible evidence indicates that the ore beds are narrow and that the ore occurrence is erratic. Water did not present a problem to the operators, therefore, the shallow workings in depth may indicate shallow mineralization and lack of ore.

THE ORE

The red and black oxides, and the blue and green carbonates of copper are found on the surface. However, these minerals are not abundant; chalcocite is the principal copper mineral. It occurs as minute, dark nodules in thin seams sometimes along bedding, or joint planes.

CONCLUSION

Because of the lack of evidence of sufficient mineralization, no further work is proposed on this property by the Bureau of Mines at this time.

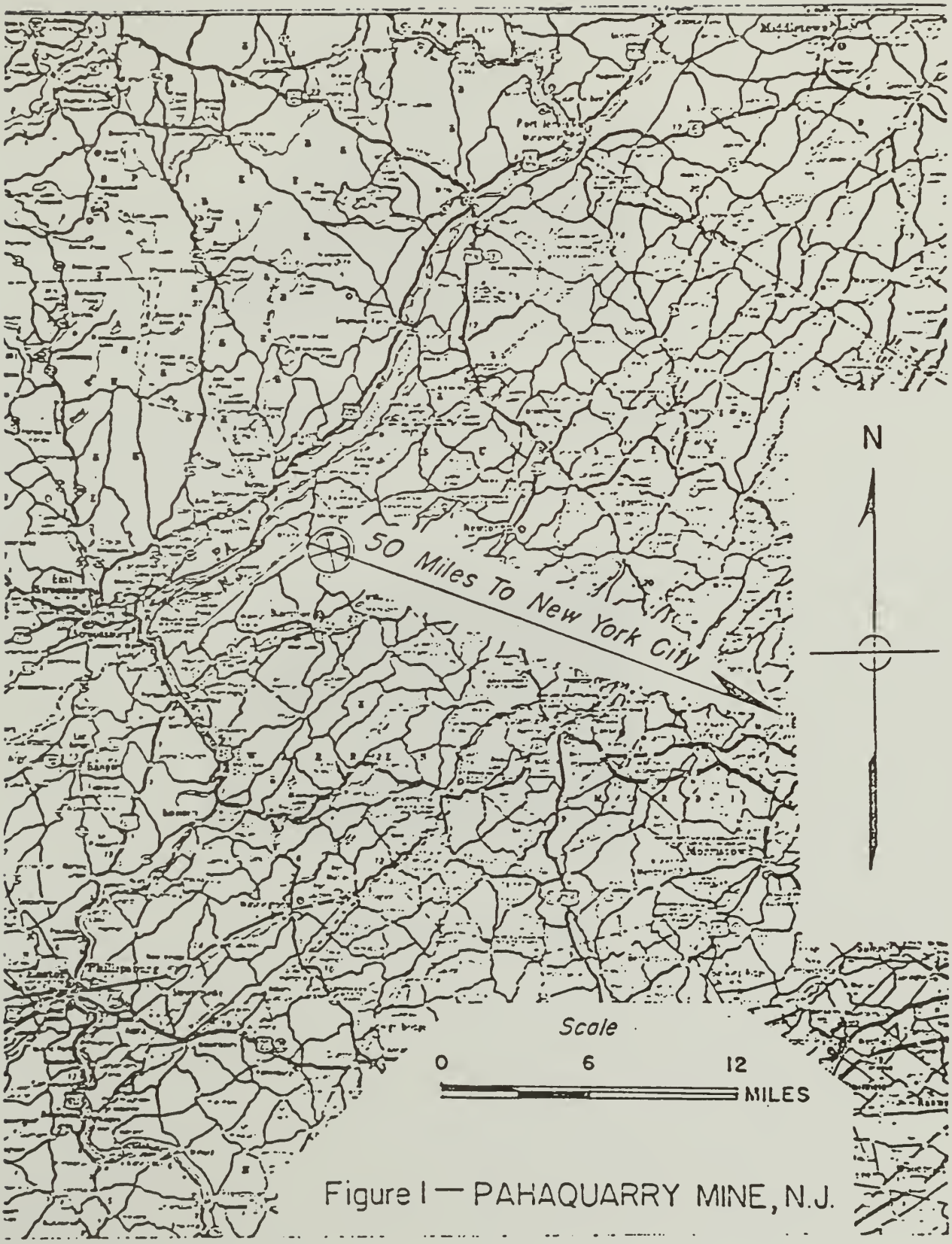

Figure I — PAHAQUARRY MINE, N.J.

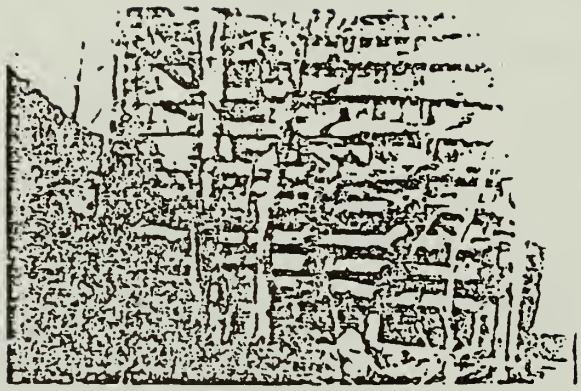

Old Bin At The PAHAQUARRY MINE

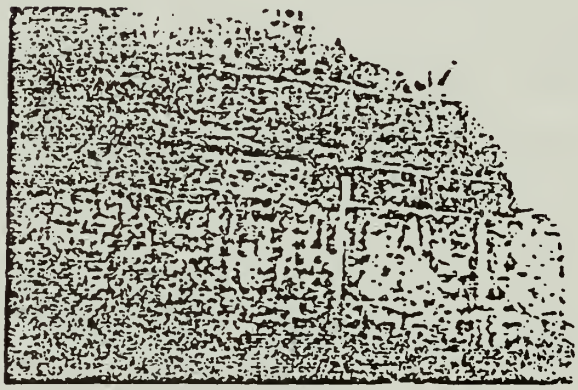

Old Mill Foundations

APPENDIX E

Cornwall, H.R. "Pahaquarry Copper Mine, Pahaquarry, New Jersey." Washington, D.C.: United States Department of the Interior, Geological Survey, June 1943.

UNITED STATES DEPARTMENT OF THE INTERIOR

GEOLOGICAL SURVEY

PAHAQUARRY COPPER MINE
PAHAQUARRY, N. J.

By

H. B. Cornwall
June, 1943

U. S. GEOL. SURVEY
CONFIDENTIAL
FOR USE OF
U. S. GOVERNMENT
ONLY

CONTENTS

	Page
Abstract	1
Introduction	1
Geology	2
Ore Deposit	2
Mineralogy	2
Occurrence of copper	3
Ore Reserves	4
Recommendation	4

ILLUSTRATIONS

Plate 1. Pahaquarry copper mine, showing all the workings...

Plate 2. "Watershed" and main quarry.....

Figure 1. Cross section B-B' of the whole area developed.... 5

Figure 2. Plan of Tunnel 1..... 6

Figure 3. Plan of Tunnel 2..... 6

U. S. GEOL. SURVEY
CONFIDENTIAL
FOR USE OF
U. S. GOVERNMENT
ONLY

UNITED STATES DEPARTMENT OF THE INTERIOR
GEOLOGICAL SURVEY

Pahaquarry Copper Mine, Pahaquarry, N. J.

By

H. R. Cornwall
June, 1943

U. S. GEOL. SURVEY
CONFIDENTIAL
FOR USE OF
U. S. GOVERNMENT
ONLY

ABSTRACT

The Pahaquarry copper mine is located in Warren County, New Jersey, 13 miles northeast of Columbia, N. J., and one-quarter mile east of the Delaware River. The ore occurs as veinlets, knots and fine disseminated specks of copper minerals, principally chalcocite, in a gray quartzite. The writer estimates a minimum inferred tonnage of 2,435,000 tons of low grade, siliceous ore.

INTRODUCTION

The Pahaquarry copper mine is located in Warren County, New Jersey, in the township of Pahaquarry. It is 13 miles northeast of Columbia, N. J., the nearest accessible village, on a fairly good secondary road which follows the east bank of the Delaware River. The main workings are in a quarry about 350 feet above, and one-quarter mile east of the Delaware River.

Pahaquarry has had an interesting history. It was one of the oldest mining operations in the eastern United States, being first worked by the Dutch about 1650. Mining and quarrying have continued sporadically ever since. The last intensive work was done during the period 1900-1911 by the Montgomery Gold Leaf Mining Company under the direction of Dr. N. S. Keith, chief engineer. The quarry along the top of the ridge, or "Watershed," as it was called by the miners, was systematically trenched and sampled. Also several exploratory inclined shafts and adits were driven, apparently at this time. Keith claims to have taken 100 samples which averaged about 3% copper.1/ This enterprise failed, according to Phyfe, because the method adopted by Keith for the separation of the copper from the ore was not workable. A 200 ton mill, two 40-foot "shaft" furnaces, and a double track tramway, connecting the quarry with the mill were all built before it was discovered that Keith's method of separation of the copper was not workable.

1/ Phyfe, W. L., Copper deposits of New Jersey: Princeton Univ. senior thesis, 1933.

U. S. GEOL. SURVEY
CONFIDENTIAL
FOR USE OF
U. S. GOVERNMENT
ONLY

The mill and mining property of Pahaquarry are now owned by the Boy Scouts of America, Washington Council, Trenton, N. J., who maintain a boy's camp during the summer at the old mill site.

The deposit has been described by N. S. Keith 2/ and W. L. Phyfe 1/ among others.

GEOLOGY

The High Falls formation, of Silurian age, is a member of a thick Paleozoic sedimentary sequence of marine origin. It has a uniform strike of N. 50°-55° E., and uniform dip of 40°-45° NW. at Pahaquarry. It is a resistant, ridge-forming member of the stratigraphic section. The Pahaquarry ridge, or "Watershed," is a subsidiary ridge on the northwest flank of the main Kittatiny Ridge.

The copper-bearing horizon in the High Falls formation is a massive gray quartzite, containing occasional red, more or less shaly, lenses one-half to two feet thick. It outcrops along the crest of the "Watershed" where it has been exposed for approximately 50 feet down the dip, and 900 feet along the strike of the inclined beds by quarrying and erosion. To the northeast the "Watershed" is truncated by a ravine up to 150 feet deep called Mine Run. The brook occupying this ravine flows northwest into the Delaware River. On the southwest the "Watershed" is crossed by another stream which likewise flows into the Delaware River. Along the southwest side of Mine Run the copper-bearing bed outcrops almost continuously for 550 ft. down the dip.

ORE DEPOSIT

Mineralogy.—The metallic minerals occurring in the High Falls copper-bearing quartzite are: magnetite (Fe_3O_4), chalcocite (Cu_2S), bornite (Cu_5FeS_4), covellite (CuS), cuprite (Cu_2O), malachite ($Cu_2(OH)_2CO_3$), and limonite ($Fe_2O_3.nH_2O$).

Magnetite is present in all the polished sections as discrete, often irregular but sometimes subhedral (triangular) or rounded grains, 0.01 to 0.05 mm in diameter. The smaller grains are usually irregular, occupying the interstices between quartz grains. The magnetite is evenly disseminated throughout the copper-bearing quartzite.

Chalcocite is abundant only locally as rich veinlets and knots, and as disseminated irregular grains .01 to 0.06 mm in diameter. There are two varieties, one blue gray, the other gray, both isotropic. They often form intergrowths.

2/ Keith, N. S., The copper deposits of New Jersey, Mining Mag., vol. 13, p. 473, 1905.

Bornite occurs with the chalcocite as irregular, rounded inclusions or sub-graphic intergrowths.

Covellite, likewise associated with chalcocite, is rare.

Cuprite and malachite are quite common as spots replacing chalcocite, and occasionally as veinlets. Sometimes the grains contain specks of unaltered chalcocite.

The weathered outcrops of the copper-bearing quartzite are usually spotted with limonite specks about 1 mm in diameter..

Occurrence of copper.—Exploration and development have been largely confined to a 40-foot horizon in the moderately dipping gray quartzite (see pls. 1 and 2 and fig. 1). The richest occurrence of copper is at the main quarry. A composite sample from this area ran 0.38% Cu. The assays in table 1, p. 3 indicate that, although the copper mineralization may be uniform throughout the 40-foot horizon, the rock is low grade, averaging from 0.1 to 0.2 percent copper. Locally there are rich seams up to two inches across, and knots up to three inches in diameter, of chalcocite. Surrounding these the quartzite contains disseminated chalcocite grains. The rich chalcocite seams usually occupy fractures which are parallel to the bedding. These fractures also often contain vuggy quartz.

Table 1

Rock analyses of the Pahaquarry copper mine, Pahaquarry, N. J.

Sample	SiO_2	Al_2O_3	CaO	MgO	Cu	Fe	S	H_2O
SF1a	75.59%	12.31%			0.19%	2.64%	0.06%	2.45%
SF1b	74.00%	13.15%			0.32%	2.65%	0.04%	2.50%
SF1aNJ	74.89%	9.87%	0.73%	2.11%	0.31%			
SF2NJ	79.11%	9.23%	——	——	0.13%			
SF3NJ	80.49%	8.84%	——	——	0.12%			
SF4NJ	——	——	——	——	0.13%			
SF5NJ	——	——	——	——	0.11%			
SF6NJ	——	——	——	——	0.24%			
SF8NJ	——	——	——	——	0.38%			

U. S. GEOL. SURVEY
CONFIDENTIAL
FOR USE OF
U. S. GOVERNMENT
ONLY

Location and description of samples in Table 1

Sample	Analysis by	
SF1a	USGS Chem Lab part 1	composite sample of the main quarry and main ore dump.
SF1aNJ	Ledoux	
SF1b	USGS Chem Lab part 2	
SF2NJ	Ledoux	composite sample of trenches 1, 2, and northwest 40 ft. of 3.
SF3NJ	"	southeast 220 ft. of trench 3.
SF4NJ	"	composite sample of trenches 4, 5, and 6.
SF5NJ	"	composite sample of tunnel 1.
SF6NJ	"	composite sample of tunnel 2.
SF8NJ	"	composite sample of main quarry.

ORE RESERVES

The copper assays in table 1, p. 3, together with a study of over 40 polished sections indicate that the copper-bearing quartzite is mineralized uniformly for at least 650 feet down the dip, over 1,000 feet along the strike, and 40 feet across the bedding. The average of the assays is 0.22 percent copper. Using a tonnage factor of 13 cubic feet per ton, there are approximately 2,000,000 tons in this block. It is too low grade to be workable.

In the main quarry and in a small cut at the northwest end of trench 4, the quartzite contains more copper. A composite sample taken at the main quarry ran 0.38 percent copper. Assuming the beds in the main quarry, and in the block between it and trench 4 to be uniformly mineralized to this grade for a width of 40 feet, 19,000 tons of ore could be quarried without stripping.

RECOMMENDATION

The writer recommends that no more work be done at the Pahaquarry copper mine. The tonnage is large but the grade is too low. It might be possible to mine a few thousand tons of 0.4 percent copper, but the cost per ton would be high on such a small tonnage.

U. S. GEOL. SURVEY
CONFIDENTIAL
FOR USE OF
U. S. GOVERNMENT
ONLY

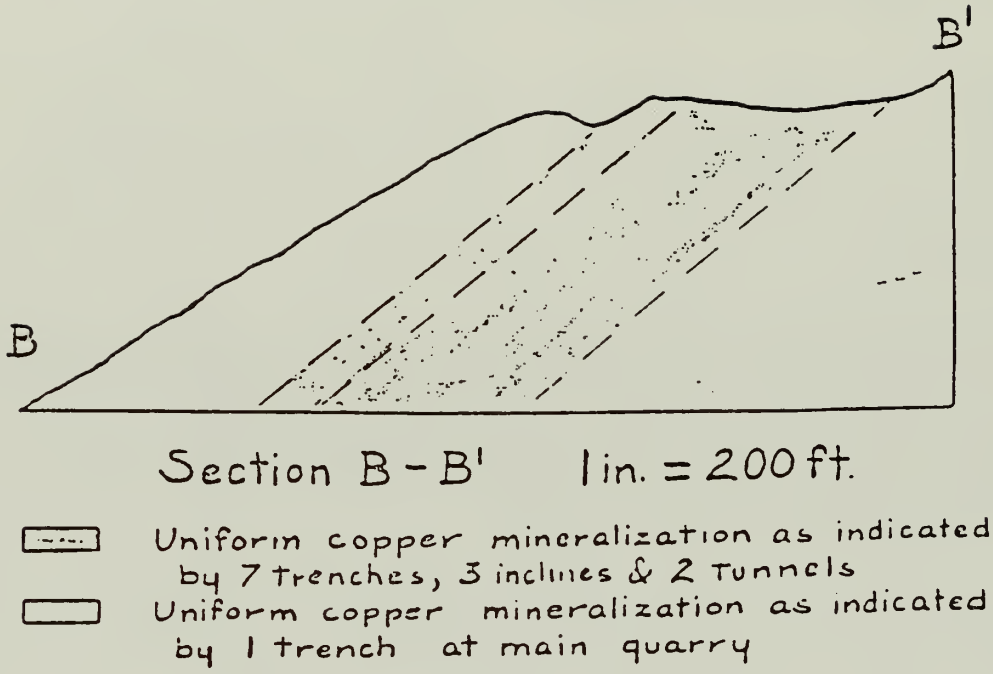

Fig. 1 Cross section B-B' of the whole area developed.

U. S. GEOL SURVEY
CONFIDENTIAL
FOR USE OF
U. S. GOVERNMENT
ONLY

UNITED STATES DEPARTMENT OF THE INTERIOR
GEOLOGICAL SURVEY

STRATEGIC MINERALS INVESTIGATIONS
PRELIMINARY MAPS PLATE 2

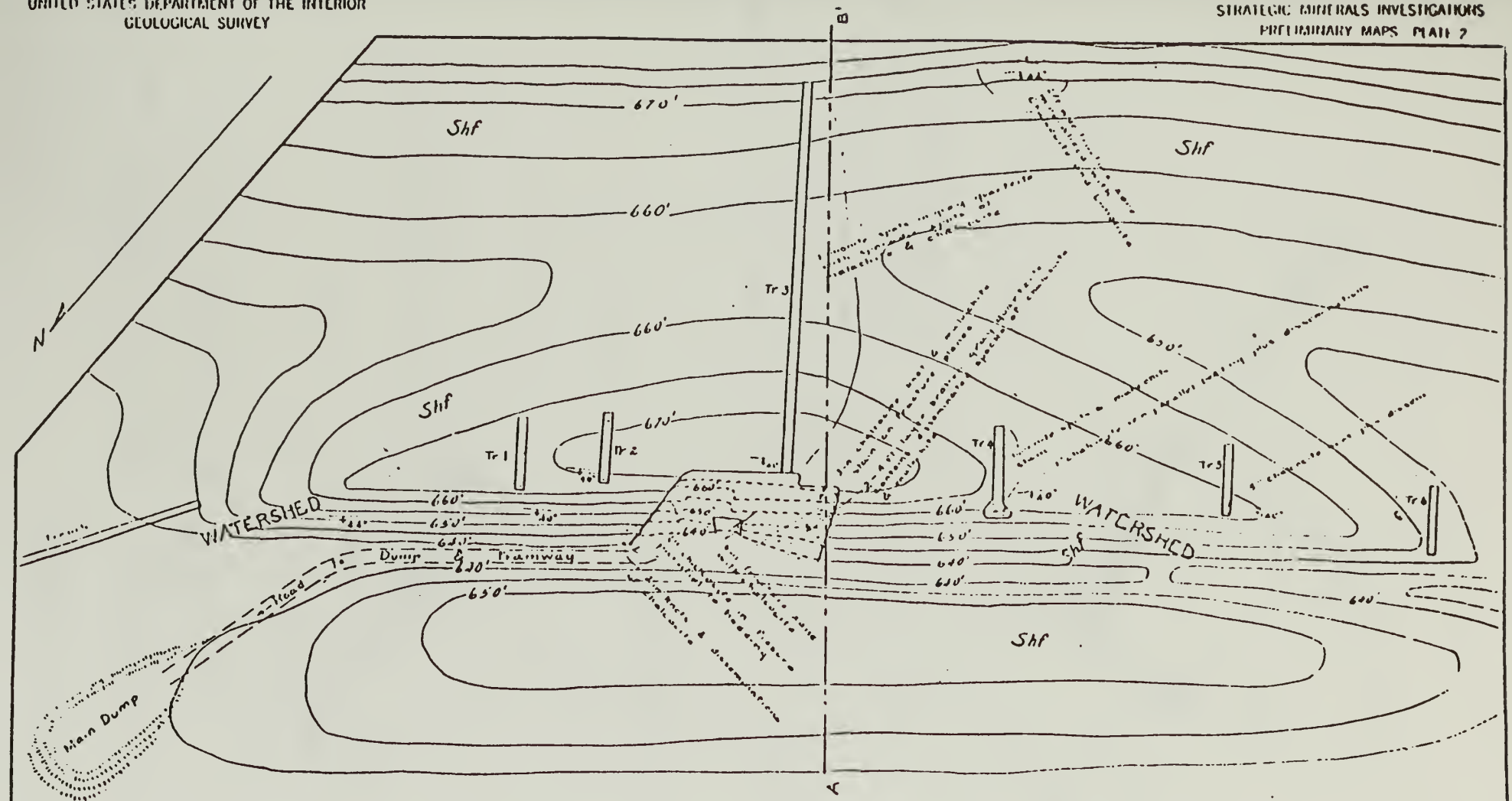

EXPLANATION

- *Shf* High Falls formation (Silurian), mostly gray quartzite at Watershed
- Strike & dip of beds
- Disseminations & knots of chalcocite
- Fissure vein of chalcocite
- Fracture zone
- Trench

WATERSHED & MAIN QUARRY
PAHAQUARRY N.J.

1 INCH = 50 FEET

CONTOUR INTERVAL 5 FT.

H. H. Cornwall, June 1943

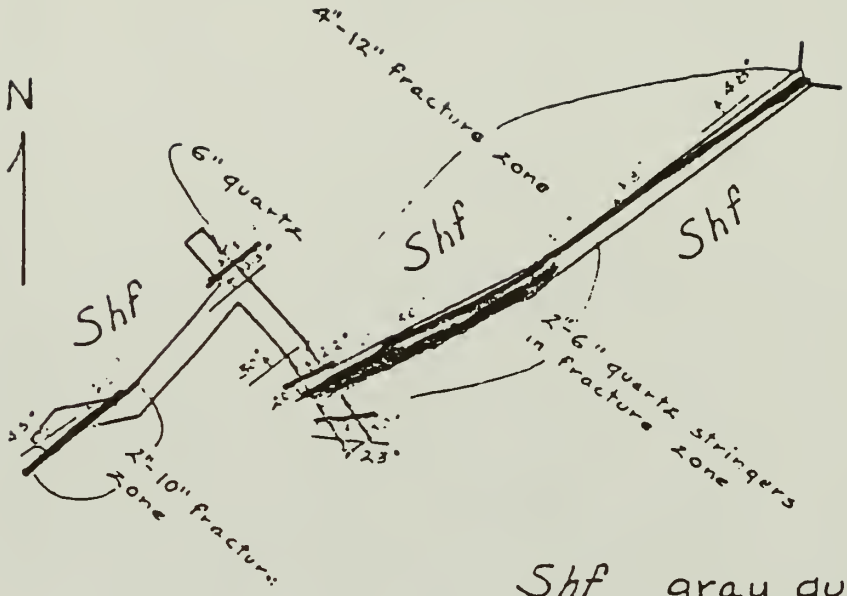

TUNNEL #1

1 in. = 50 ft.

Shf gray quartzite with shaly lenses up to 1 ft.

fracture zone

quartz veins

strike & dip of beds

Fig. 2 Plan of Tunnel 1.

U. S. GEOL. SURVEY
CONFIDENTIAL
FOR USE OF
U. S. GEOLOGISTS
ONLY

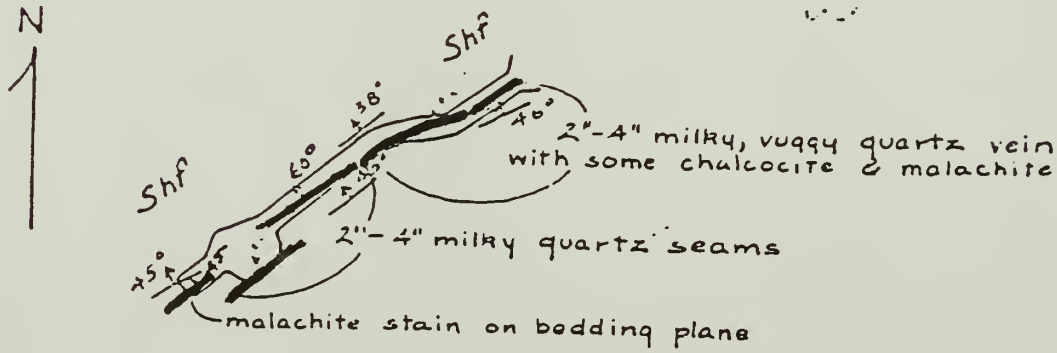

TUNNEL #2

1 in. = 50 ft.

Shf Gray quartzite (Silurian)

Milk quartz seams

Chalcocite & malachite stringers

Strike & dip of beds

Fig. 3 Plan of Tunnel 2.

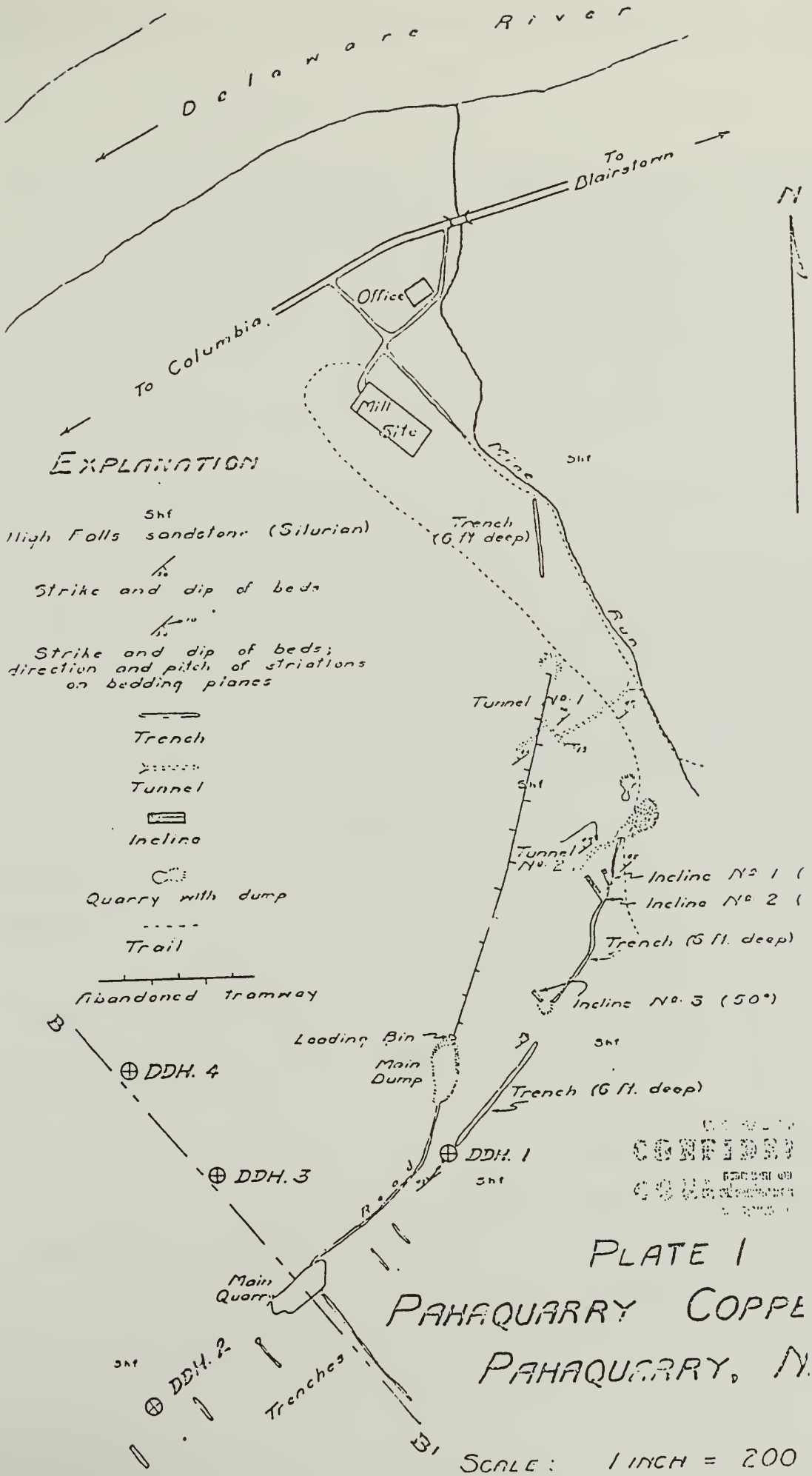
Delaware River
To Blairstown
N
Office
To Columbia
Mill Site
Mine Run
Shf
EXPLANATION
Shf
High Falls sandstone (Silurian)
Strike and dip of beds
Strike and dip of beds; direction and pitch of striations on bedding planes
Trench
Tunnel
Incline
Quarry with dump
Trail
Abandoned tramway
Trench (6 ft deep)
Tunnel No. 1
Tunnel No. 2
Incline No. 1
Incline No. 2
Trench (6 ft. deep)
Incline No. 3 (50°)
Loading Bin
Main Dump
Trench (6 ft. deep)
B
B1
DDH. 4
DDH. 3
DDH. 1
DDH. 2
Main Quarry
Trenches
PLATE I
PAHAQUARRY COPPE
PAHAQUARRY, N.
SCALE: 1 INCH = 200

Location: The property is located along the southwestern slope of Kittanning Mountain in Pahaquarry Township. The mine is about 13 miles northeast of Columbia and one-quarter mile east of the Delaware River.

History: The mine was worked first in 1650. Mining and quarrying have continued sporadically ever since. The last intensive work was done during the period 1900-1911. The mill, erected during that period, and the mining property are now owned by the Boy Scouts of America, Washington Council, Trenton, N. J.

Description of the Deposit: The ore occurs as veinlets, knots, and fine disseminated specks of copper minerals, principally chalcocite, in a gray quartzite member of the Silurian age High Falls formation. The deposit is estimated to contain 2,000,000 tons of rock, assaying 0.22% copper.

A request was made by Mr. Daniel W. Earle, Scout Executive, that the U. S. Bureau of Mines survey and make deep test borings on the property. To date no drilling has been done by the Bureau of Mines. In a memo to Mr. J. H. Hedges, Special Asst. to the Director, U. S. Bureau of Mines, the writer referring to the request, cites two reports and further states... "Both reports indicate a large quantity of low grade ore, and both reports question the advisability of mining by private enterprise."

Work by the Bureau of Mines: An examination of the mine was made in 1942. The examiners opinion of the mine coincides with the latter two reports noted above.

References: (26) (27) (28)

Hackettstown Magnetite Deposits

Location: Twenty-one mines and prospects are located along an east-west belt about 3 miles north of Hackettstown.

History: The above mines are listed in the Geological Survey of New Jersey, "Iron Mines", 1910, and were worked as iron mines.

Description of the Deposits: The deposits occur as mineralized zones in the pre-Cambrian gneisses, previously mentioned in this survey. Although the deposits were mined in the past for their iron content, they are of interest in the present survey because of their high sulfur content (up to 3 percent sulfur). It is possible that if the deposits in the Byram gneiss belt are again mined, the quantity of sulfur that could be recovered from the ore might represent a significant commercial factor. The figure for sulfur recoverable might possibly amount to a million tons.

Work by the Bureau of Mines: A great number of the magnetite deposits in the New Jersey, Byram gneiss belt have been examined by the Bureau and some drilled. Reports on the deposits investigated have not been listed under the Sulfur Survey as the data on sulfur content available in the reports are insufficient to make even an "Inferred Ore" reserve estimate.

NEW JERSEY

References:

(1) War Minerals Memorandum on Schuyler or Arlington Copper Mine, by G. D. Jermain, Feb. 1943.

(2) U. S. Geological Survey, Confidential Report on Schuyler or Arlington Copper Mine by H. R. Cornwall, Nov. 1943.

(3) Lewis, J. V., Copper Deposits of the New Jersey Triassic; Econ. Geol. Vol. 2, pp. 242-257, 1907.

(4) Darton, N. H., U. S. Geological Survey Geol. Atlas, New York City Folio (No. 83) 1902.

(5) Cook, G. H., Geology of New Jersey, p. 680, 1868.

(6) U. S. Bureau of Mines, W.M.M. by G. D. Jermain, June 1943.

(7) Lewis, J. V., Annual Report of the State Geologist, pp. 153-154, 1906.

(8) U. S. Bureau of Mines, W.M.M., by G. D. Jermain, February 1943.

(9) U. S. Bureau of Mines, W.M.M., by G. D. Jermain, March 1943.

(10) Geological Survey of New Jersey, Vol. VII, "Iron Mines", 1910, P. 374.

(11) Green Pond Mines, Bureau of Mines, W.M.M., by G. D. Jermain, April 1945.

(12) Copperas & Bancroft Shaft, Bureau of Mines, W.M.M., by L. R. Williams, June 1945.

(13) U. S. Bureau of Mines, W.M. Report by G. D. Jermain, May 1944.

(14) U. S. Bureau of Mines, W.M.M., by V. J. Lynch, August 1943.

(15) Copper Handbook, Vol. VIII, p.4.

(16) U. S. Bureau of Mines, W.M.M., by G. D. Jermain, August 1943.

(17) Cook, George H., Geology of New Jersey, 1868.

(18) Annual Report of the State Geologist, New Jersey Geological Survey, 1906, p. 150.

(19) U. S. Bureau of Mines, W.M.M., by G. D. Jermain, August 1942.

(20) U. S. Bureau of Mines, W.M.M., by G. D. Jermain, June 1943.

(21) U. S. Bureau of Mines, W.M.M., by G. D. Jermain, May 1945.

New Jersey - References cont'd.

(22) U. S. Bureau of Mines, W.M.M., by G. D. Jermain, June 1945.

(23) Geological Survey of New Jersey, Vol. VII, "Iron Mines", 1910, pp. 2.7-289.

(24) U. S. Bureau of Mines, W.M.M., by V. J. Lynch, March 1943.

(25) Spencer, A. C., U.S.G.S., Folio No. 161.

(26) Cornwall, H. R., U.S.G.S., "Pahaquarry Copper Mines", June 1943, Open File October 1945.

(27) Woodward, H. P., "Copper ~~Mining~~ Mines and Mining in New Jersey", published by the State Department of Conservation and Development, 1944.

(28) U. S. Bureau of Mines, W.M.M., by G. D. Jermain, August 1942.

APPENDIX F

Woodward, Herbert P. "Pahaquarry Mine." Trenton, N.J.: State of New Jersey, Department of Consevation and Development, 1944.

APPENDIX I

Report by Herbert P. Woodward

Dept. of Conservation and Development

State of N. J.

1944

PAHAQUARRY MINE

Location:

The old Pahaquarry (Pahaquarri or Pahaquarra) copper diggings are situated near the former site of Dimmick's Ferry across Delaware River, 8 miles above the town of Watergap and 20 miles southwest of (below) Minisink Island. The locality is about 6 miles southwest of Flatbrookville and is approximately two miles due north of Mt. Vernon. It is situated in Pahaquarry, Township of Warren County, about half a mile from the southeast bank of the river. The mine property and old buildings now belong to the George Washington Council, Boy Scouts of America.

It is difficult to reach the mine by automobile, the only route being the partly improved road which follows the southeast bank of the Delaware between Dunnfield and Millbrook. An old wagon road formerly crossed Kittatinny Mountain from the ferry to Mt. Vernon, but this route is now impassable for automobile traffic.

The mine openings lie on the northwest flank of Kittatinny Mountain at an elevation of about 650 feet above sealevel. The mountain slope is rocky and mostly wooded; for except along the river, the region is poor farm land and is thinly populated. Long ago, however, the road past the mine was an important colonial highway, then widely known as the Old Mine Road. In December, 1776, General Gates marched down this road with seven regiments to reinforce Washington's depleted army only three days before the famous crossing of the Delaware.

About 1860 the property was investigated again, apparently by Philadelphia interests, and some of the long-abandoned workings were cleaned out. Samples of ore were assayed, and active mining was contemplated. The ore, however, was found to be too poor to work, and nothing resulted from the venture. The mines again lay idle until 1868, at which time they were owned by Mr. Keyser of Hainesburg, who explored the old tunnels and reported that there was then one adit, 150 feet long, and an inclined shaft. An unsuccessful attempt was made to open the mines about 1900, but nothing came of it save to redirect attention to the former mining history, begun 250 years before.

In 1901, the Montgomery Gold Leaf Mining Company bought 1,028 acres of land from Philip Godley of Philadelphia, including the old copper workings. The company prospected widely over the area, and dug some new cross-cuts at several points. H. D. Deshler of Belvidere was secretary and O. R. Deshler was president of the company, which sold mining stock mostly to residents of the near vicinity. Some token mining was done, and one of the new tunnels is reported to have penetrated the mountain for 240 feet. By 1905, however, there had been little or no genuine mining, although 100 tons of ore was reported to have been removed. A 200-ton mill was erected to use the Keith process, patented by Dr. N. S. Keith, metallurgist for the Montgomery Company.

In 1906 the Pahaquarry Copper Company (successors of the Montgomery Company) reported that operations were "at a stage where the ore and methods of treatment can now be tested", but in 1908 the company officials admitted that the character of treatment and equipment at hand needed to be "materially altered". In 1910, they wrote

that they had been compelled to close down the previous year so as to install a pumping station, and that they had electrified the plant, adding a flotation system as well as a large ore-drier. The mine was operated for three months in 1911, and the 200-ton concentrating mill was active for two months, but no concentrates were shipped. It was reported that the ore mineral broke too finely for profitable extraction by the process used, and that losses in tailings were considerable. Also, that experiments were being made to improve the recovery.

Unfortunately the whole venture proved fruitless, the hope of successful exploitation apparently being no better grounded than in the painfully parallel history of operations at the Schuyler mine, 10 years before. The Pahaquarry Copper Company went into the hands of a receiver, and the property was ultimately taken over by the Delaware Valley Exploration Company, of which Philip Godley of Philadelphia, an earlier owner, was president. It was rumored in 1917 that this company was negotiating with an English group that represented the Lockwood process for extraction of copper, but the years passed with no further activity at the locality. Ultimately the mine buildings were dismantled and the workings abandoned.

Some years later the mines were included in the purchase of a tract of 1,500 acres by the George Washington Council, Boy Scouts of America, for use as a permanent summer camp. The little-used machinery was broken up, hauled away and sold as junk. One of the old mine buildings has served as a mess hall and handicraft shop for the scouts - its only profitable use since construction.

The Pahaquarry mine was never profitable, and its history fails to suggest any prospects of future economic importance. The extreme antiquity of the workings lends them historical interest, and the ore occurrence in Silurian rocks gives the copper minerals geologic significance. As a workable mine, however, the locality is unpromising.

General Geology:

The Pahaquarry mine occurs on the northwest slope of Kittatinny Mountain, from 150 to 450 feet above Delaware River. The geologic sequence near the mine is as follows:

Silurian.....	(Decker formation.....	60 feet
	(Bossardville limestone...	75 "
	(Poxino Island shale.....	200 "
	(High Falls formation.....	1800-2000
	(Shawangunk conglomerate..	1900
Ordovician.....	(Martinsburg shale.....	3000

The ore-bearing beds occur in red and gray sandstones of the High Falls formation, which is a thick assemblage of red and green-gray nonmarine rocks of middle and late Silurian age. This formation overlies the Shawangunk conglomerate and is apparently overlain by the Poxino Island shale, but the exact relations of its upper and lower contacts are far from clear. The main body of the formation consists of fairly massive sandstone and intercalated shale. The sandy zones show no cleavage, but exhibit numerous joint planes; the red shales contain marked cleavage that dips southeastward at steep angles. Most of the shales are thin bedded, with smooth or dimpled surfaces and somewhat splotchy colors. High Falls sandstones are gray-green to green in

color and vary in texture from fine to coarse; many are rough-bedded and most are pebbly. The exact thickness of this formation is difficult to determine, both because of minor folds that complicate the local structure and because of the uncertain location of the precise top and bottom of the unit. An estimate by Kummel gives 2,300 feet for the thickness of the High Falls near the Pahaquarry mine, but the average is probably somewhat less, possibly 1,800-2,000 feet.

Because no fossils have been found in it, the age of the High Falls formation can be approximated only by its stratigraphic position, a method that is not sufficiently accurate to establish its exact correlates. Data derived from studies in eastern Pennsylvania, however, suggest that the underlying Shawangunk conglomerate is partly the northern equivalent of the Tuscarora sandstone (lower Silurian) of Pennsylvania, and that it also ranges higher than the Tuscarora to include some, possibly a considerable part, of the Rose Hill (Clinton) horizon as well. From observations in Maryland and Pennsylvania, it is known that a red-shale facies gradually replaces marine late Silurian rocks in an easterly direction, forming the Bloomsburg redbed facies of the upper Silurian of Maryland and Pennsylvania. It is believed that this facies passes directly eastward into the High Falls formation, where it replaces not only the late Silurian, but also extends downward to supplant the equivalent Niagara beds, and probably the upper part of the Clinton horizon also. The suggestion is therefore made that the High Falls formation is the nonmarine redbed equivalent of the upper Clinton (Rose Hill), Niagara (McKenzie) and, possibly, lower Cayugan (Wills Creek) formations of central Pennsylvania. The formation thins northward into New York State, losing its sandy beds, and becoming a thin red shale at High Falls, New York, where it is possibly 200 feet thick. It is there overlain by the Binnewater sandstone and Wilbur limestone, both of probable Tonoloway age (late Cayugan); and it is underlain by a thinned Shawangunk conglomerate.

The Shawangunk conglomerate, which underlies the High Falls formation at the Pahaquarry mine, maintains the crest of Kittatinny Mountain with bold rocky bluffs that supply much coarse talus to the mountain flanks. It is an indurated sandstone and conglomerate, many beds carrying pebbles up to one inch in diameter. There are several small lenses of dark shale, and some green and reddish shale, especially in the upper portion. As the High Falls formation is sandy near its base, the mutual boundary between the two formations is difficult to establish.

The sandy layers of the Shawangunk are even-grained, and the entire formation shows evidence of good sorting; for even the pebbles of conglomeratic zones show a small range of size in any one bed. A few strata are cross-bedded, while others show ripple marks. Much of the rock is gray or dark-gray on weathered surfaces, and many beds approach the lithologic character of quartzite. Probably the term "subquartzite" is appropriate for much of the formation. The thickness of the Shawangunk formation varies but must be close to 2,000 feet near the mine. It does not contain fossils in this vicinity, although small collections obtained elsewhere indicate an early Silurian age. Its upper portion probably includes representatives of the early Clinton. It is unconformably underlain by the Martinsburg shale of Ordovician age.

The basal beds of the Shawangunk formation contain considerable pyrite, and it is reported that the lower few inches of the rock carry native gold, in places to an alleged value as high as $11 per ton. "Anywhere along the outcrop of the contact between the conglomerate and the Ordovician slate one can obtain pyrite ore that is rich in gold".

The red shales of the upper part of the High Falls formation are concealed along Delaware River, where the next higher formation is a buff or greenish calcareous shale cropping out on Poxino Island about one mile north of the Pahaquarry mine. This shale is irregularly bedded and contains no fossils; its lower contact with the High Falls shale is concealed. The rock has been called Poxino Island shale, and it has an estimated thickness of 150-200 feet, being overlain by the Bossardville limestone of Tonoloway age (latest Cayugan). Probably the Poxino Island shale is Cayugan, possibly early Tonoloway or late Wills Creek in age. The Bossardville limestone, 50-100 feet thick, is overlain by the Decker formation above which are rocks definitely of Devonian age.

The geologic structure of the Pahaquarry area is that of a gently dipping homocline wherein the rugged Shawangunk conglomerate, which forms the summit of Kittatinny Mountain, dips about 45 , N.30 W. The upper side of the mountain is a dip-slope developed on the conglomerate, but the High Falls formation flanks the mountain in increasing volume on the lower, more gentle slopes where the conglomerate passes into the ground. Differential erosion of High Falls sandstone and shale has produced minor terraces and swales along the flank of the hill, while Delaware River has entrenched its channel on the soft upper red shales of this formation.

There are slight local disturbances in the structure of the upper part of the High Falls formation, minor synclinal and anticlinal folds being revealed by slight changes in dip. These are visible in the excellent exposed section across the truncated end of the mountain at Delaware Water Gap. In general, however, the rocks at the mine have a uniform strike, and any variations from the dip of 40-45 are small. There is no indication of faulting near the mine.

Nature and Occurrence of the Ore:

The chief ore mineral of this locality is chalcocite which impregnates sandstone of the middle part of the High Falls formation in a zone that may be traced for several thousand feet along the strike, and may range through a vertical thickness of 200 feet. The portion of the formation containing the copper minerals consists of gray sandstone in beds 2 to 6 feet thick separated by bands of red shale six inches to 2 feet thick. The ore-bearing sandstones are dense and not especially permeable, although they are traversed by numerous vertical joints that strike N. 20 E. The intervening shales have a splintery fracture, possibly due to a rudely developed cleavage that corresponds with the direction of the sandstone joints. One sandstone ledge, known as the "watershed", is conspicuously exposed above the main workings, and has been stripped for a lateral distance of nearly 2,000 feet along the strike. Several crosscuts and old workings reveal sections across

the ore-bearing zones and indicate the character of the beds worked.

The grayish mineral chalcocite is finely impregnated through the Silurian sandstone, which because of its similar gray color, generally conceals the copper ore. Probably attention was first directed to the mineral by the green carbonate stains which develop from incrustations of malachite and chrysocolla that coat some bedrock surfaces. These stains occur on joint planes, but do not penetrate far below ground. Chalcocite also occurs in thin seams along certain bedding or joint planes, in places extending some distance into the bedrock. Less commonly the fractured surfaces of the sandstone reveal patches several inches or even a foot across wherein chalcocite has partially replaced the body of the rock. These patches, or nodules, have irregular shapes and occur in groups that are unevenly distributed through the rock. In these richer orebodies, the copper mineral is readily visible to the naked eye. Throughout most of the leaner rocks, however, it is completely invisible until it is specially concentrated, as by panning the pulverized sandstone.

The ore beds crop out near the mine in a ravine known as Mine Run, their lowest exposures being about 150 feet above the Delaware or 450 feet above sealevel. From this point to an elevation of 750 feet along the ridge, the rocks appear to be more or less continuously cupriferous. Thus there is a considerable width as well as length of exposed copper-bearing beds. The thickness of the copper-impregnated zone has not been accurately determined but may be 200 feet or more. If these estimates of extent and thickness are reliable, the volume of low-grade ore present is noteworthy. It has been reported that 100 samples of the ordinary gray sandstone averaged 3.25 per cent copper in the form of chalcocite.

Genesis of the Ore:

The origin of the Pahaquarry copper deposits is far from clear, for the extensive occurrence of chalcocite in a Silurian sandstone is unique in the eastern United States. Copper ores of this general type are known in late Paleozoic rocks of many regions, and are common in western Triassic sandstones; but there is no close eastern analogue in rocks of this age with which the New Jersey deposit may be genetically compared.

Perhaps the most important difference between the Pahaquarry deposit and other New Jersey copper localities lies less in the age of the containing rocks than in an apparent independence of igneous rocks. Whereas all Triassic occurrences reveal at least a probable genetic association of the copper minerals with some igneous body, the Pahaquarry deposit has no such detectable relation. It is true that on the opposite side of Kittatinny Mountain some 30 miles northeast of the Pahaquarry mine there is an intrusion of nepheline syenite near Beemerville, New Jersey, and that this intrusive may be an apophysis of a larger igneous body which might extend beneath or near the Warren County copper locality. On the other hand there is no cogent reason to link the copper minerals with this intrusive, and it cannot anywhere be seen cutting the adjacent Shawangunk conglomerate. The intrusive is therefore, probably older than the Shawangunk (and the overlying High Falls formation) and it seems most probable that the cupriferous occurrence is independent of any igneous material.

Thus it appears that the Pahaquarry copper is definitely epigenetic in character and contains no material of hypogenic origin. On the basis of evidence at hand, one may surmise that the original copper minerals were disseminated in the sediments at the time of deposition, possibly as finely divided copper ores, in part precipitated from solutions derived from the land area of the time, in part carried as rare cupriferous detritus.

The High Falls shale at High Falls, New York, contains a conspicuous quantity of cubic pyrite. The mineral occurs in red shales from which perfect cubic crystals may be obtained, some being as much as one-half inch wide. This pyrite is sparsely accompanied by chalcopyrite, attesting the presence of copper metal there also.

It is reasoned that the High Falls formation is of shallow-water or even subaerial origin; that it accumulated rapidly; and that deposition occured under conditions of partial, or at least seasonal aridity. The sediments represent alluvial or coastal-plain detritus in which small amounts of both iron and copper were carried in finely divided state. Probably the metals were assembled during erosion of the same rocks that produced the sedimentary debris. The iron may have been transported as grains of magnetite, the copper as tiny particles of chalcopyrite embedded in heavy-mineral grains in the sedimentary debris. Concomitant conditions of aridity or partial aridity led to local impregnations of salt and gypsum in allied red shales.

When atmospheric waters charged with salt and gypsum reached beds containing the cupriferous detritus, they are believed to have taken the copper into solution, leaching it from the zones in which it had been contained. The waters which concentrated the copper are thought to have been mainly sodium-chloride or calcium-sulphate solutions capable of carrying copper sulphate or, possibly, copper chloride. These concentrating solutions transported the metal, depositing it in certain horizons probably not far removed from the original source of the copper. The geologic features suggest deposition at relatively low temperatures, presumably below the point (91 C.) above which octahedral chalcocite is produced.

In other deposits of this general type, as in redbeds of the southwest, deposition of copper has taken place where the solutions encountered carbonaceous material or plant remains in the rocks. As the latter are conspicuously lacking in the High Falls formation, it seems probable that here the copper-bearing waters relinquished their metal for some other reason, possibly in zones where they encountered other, more acidic, meteoric circulation.

Inasmuch as the chalcocite of the High Falls formation has been partially altered to carbonate and silicate minerals, it is clear tha a later generation of meteoric waters in the zone of oxidization must have induced production of younger alteration minerals, whose genesis is a function of fairly recent exposure of the copper-bearing beds to surface circulation.

In summary, it is believed that the disseminated copper of the Pahaquarry deposit is assuredly epigenetic in origin, being concentrated by meteoric solutions that leached the metal from minute grains of chalcopyrite previously scattered through the sandstone in detrital form. As the copper minerals are all supergene, there is no reason to anticipate richer deposits or for that matter any copper minerals at greater depth.

Economic Importance:

All ore deposits of the general Pahaquarry type are of low tenor, and can be utilized only in exceptional cases. The importance of any locality is a function of the ease with which its copper can be recovered from lean ore, and of transportation and other costs. It has been indicated that a considerable volume of copper-impregnated sandstone occurs at the Pahaquarra mine. Data are not now available, however, to guarantee that the ore minerals can be separated from the rock in workable quantities, or that a concentrated ore can be satisfactorily smelted in a profitable enterprise. It must be strongly suspected that this is not a deposit of commercial value or potential economic significance; yet such a suspicion has not been proven beyond shadow of doubt, and the status of the deposit must still be described as uncertain. Nonetheless, the writer cannot now recommend the expenditure of time and money needed to remove the uncertainty; the risk of failure is too great.

APPENDIX G

Reeve, Stuart A. and J. Sanderson Stevens. "Phase I Archeological Investigations at the Pahaquarry Copper Mines Parking Area, Delaware Water Gap National Recreation Area, Warren County, New Jersey." West Chester, Pa: Prepared for the National Park Service by John Milner Associates, Inc., December 1992

Phase I Archeological Investigations
Pahaquarry Copper Mines Parking Area

May 1993

Delaware Water Gap

National Recreation Area

New Jersey

PHASE I ARCHEOLOGICAL INVESTIGATIONS AT THE PAHAQUARRY COPPER MINES PARKING AREA, DELAWARE WATER GAP NATIONAL RECREATION AREA, WARREN COUNTY, NEW JERSEY

by

Stuart A. Reeve, Ph.D.
J. Sanderson Stevens

Prepared for the National Park Service

John Milner Associates, Inc.
309 North Matlack Street
West Chester, PA 19380

Under Contract CX-2000-1-0008
Work Order No. 14

Principal Investigators:

James A. Robertson, Ph. D.
John Milner Associates, Inc.

and

Paul Y. Inashima
National Park Service

Government Technical Representative

Douglas C. Comer, Chief
Eastern Applied Archeology Center
Denver Service Center-TEA
National Park Service
12200-A Plum Orchard Drive
Silver Spring, MD 20904

1993

ABSTRACT

A Phase I archeological survey of two proposed parking areas was conducted for the National Park Service, Denver Service Center by John Milner Associates, Inc. at the Pahaquarry Copper Mines, Delaware Water Gap National Recreational Area, Warren County, New Jersey. The proposed parking areas, designated Area 1 and Area 2, are located on a high Wisconsin-aged terrace, southwest of the Old Mine Road National Historic District. A total of 28 shovel test units and 4 deep auger borings was excavated for historic and prehistoric archeological sites. Only three chert flakes, representing isolated artifact locations, were recovered during the Phase I investigations. A sparse scatter of early to mid-20th-century artifacts, rock clusters, and structural remains, probably related to the Pahaquarra Boy Scout Reservation, were observed in Areas 1 and 2. No evidence for the reputed 17th-century Dutch exploitation of the Pahaquarry copper mines was encountered. Based on the negative results of the Phase I investigations, it is recommended that no additional archeological investigations are warranted in the vicinity of the two proposed parking lots.

TABLE OF CONTENTS

Abstract ii

List of Tables iv

List of Figures v

List of Plates vi

1.0 Introduction 1

2.0 Project Setting 3

3.0 Cultural Context 4

3.1 Prehistoric Overview 4
3.2 Historic Overview 4

4.0 Survey Methodology and Results 6

4.1 Survey Methodology 6
4.2 Survey Results 7

4.2.1 Area 1: South Parking Area 7
4.2.2 Area 2: North Parking Area 8

5.0 Summary and Recommendations 11

6.0 References Cited 14

Tables 17

Figures 25

Plates 34

LIST OF TABLES

Table 1. Summary of Field Work Elements.

Table 2. Pahaquarry Copper Mines, Phase I Archeological Survey: Soil Descriptions and Artifact Inventories.

LIST OF FIGURES

Figure 1. Project Location (Detail of Bushkill, PA-NJ, 7.5 Minute Quadrangle; USGS photorevised 1983).

Figure 2. Project Area Showing Proposed Parking Lots (Area 1 and Area 2).

Figure 3. Detail of *Pahaquarry Copper Mines* (after Cornwall 1945) Showing 20th-Century Mining Structures, Tunnels, and Trenches and Proposed North Parking Area (Area 2).

Figure 4. Detail of Pahaquarra Scout Reservation (Anonymous 1968) Showing Camp Structures and Approximate Location of Area 1 and Area 2.

Figure 5. Area 1, South Parking Area Showing Shovel Tests and Boring Locations.

Figure 6. Representative Shovel Test and Soil Description from Area 1.

Figure 7. Area 2, North Parking Area Showing Shovel Tests and Boring Locations.

Figure 8. Representative Shovel Test and Soil Description from Area 2.

LIST OF PLATES

Plate 1. Area 1, South Parking Area from the Southeast (Datum at Base of Tree on the Left).

Plate 2. Area 2, North Parking Area from the South (Datum at Base of Tree on the Right).

1.0 INTRODUCTION

This report summarizes Phase I archeological investigations conducted by John Milner Associates, Inc. (JMA) at the proposed Pahaquarry Copper Mine parking relocation area, Delaware Water Gap National Recreation Area, Warren County, New Jersey. The work was conducted for the National Park Service (NPS), Denver Service Center (DSC), under provisions of Contract CX-2000-1-0008; Work Order No. 14; DEWA 264-42, 2001-0491-402. The Phase I investigations were conducted in accordance with the scope of services prepared by Paul Y. Inashima of the DSC-Eastern Applied Archeology Center, Silver Spring, Maryland.

The purpose of the project was to identify the presence or absence of cultural resources which may be affected by construction of two proposed parking lots and to evaluate the potential significance of identified archeological resources to the National Register of Historic Places (NRHP). The two proposed parking lots lie west of the Old Mine Road National Historic District. The copper mines were periodically utilized from the 19th century into the early 20th century. Prehistoric Paleo-Indian, Archaic and Woodland sites are known along terraces of the Delaware River to the north and west.

The National Park Service Scope of Services called for excavation of ten shovel test units and two deep bucket auger borings within each of the two proposed parking areas. The project area occupies a relatively flat kame terrace on the east and south of Old Mine Road. Fieldwork was conducted by a two-person team from September 10 through 13, 1992, with an additional day of supplemental testing during September 30, 1992.

Paul Y. Inashima, DSC-Eastern Applied Archeology Center, was NPS Principal Investigator. J. Sanderson Stevens served as JMA project coordinator, and Dr. James Robertson served as JMA principal investigator. Fieldwork was conducted by Dr. Stuart A. Reeve, with technical field

assistance by Charles R. Walker, Jr. Clark J. Hutchinson of Hightstown, New Jersey, contributed important historical documents relating to copper-mine operations and the Pahaquarra Scout Reservation. Paul Y. Inashima provided the background research available within NPS files for the Pahaquarry area. Dr. Reeve prepared the management report. Sarah Ruch prepared the graphics, and Margy Schoettle prepared the final manuscript.

2.0 PROJECT SETTING

The Pahaquarry Copper Mine project area is located one-quarter mile east of the Delaware River, downstream from Poxono Island in Pahaquarry Township, Warren County, New Jersey (Figure 1). The project area occupies a relatively high (approximately 50-foot) terrace at an elevation of 350 feet above sea level. The geologic sequence of terrace formation along the Delaware River is not well defined for this location (e.g., Otter 1992:4). Based on known archeological deposits in the area, the 50-foot terrace may represent a kame terrace of Wisconsin age (Wagner 1992:pers. comm.). The Delaware floodplain is relatively narrow upstream and expands downstream from the project area. Floodplains and terraces are well-suited for agriculture and possess a higher probability of containing prehistoric sites than areas with higher slopes.

The Pahaquarry Copper Mine and associated historic structures are north and east of the project area, along the lower slope of Mine Brook (Figure 2). The geologic substrate and copper-bearing deposits consist of High Falls quartzites of Silurian age, part of the thick Paleozoic marine sedimentary sequence in this portion of the Delaware Valley (Cornwall 1945).

The project area lies at the base of Kittatinny Ridge (Figure 1). More specifically, the two archeological testing areas were located west of Mine Brook and east and south of Old Mine Road (Figure 2). Old Mine Road, which forms the western boundary of the project area, is part of the Old Mine Road Historic District. The southern testing area (Area 1) measures approximately 5000 square feet and consists of immature forests of black cherry, maple, and dense shrubs of bittersweet, Russian olive and Rose-of-Sharon. The northern area (Area 2) is approximately 7800 square feet in extent, with a mixed deciduous forest dominated by maple and beech and an open understory. General discussions of climate, soils, flora and fauna have been presented by Otter (1992:1-3).

3.0 CULTURAL CONTEXT

3.1 Prehistoric Overview

The Pahaquarry area has long been recognized as an area of intensive Native American occupation. Otter (1992:6) identified nine prehistoric sites within one mile of the Pahaquarry mine. A fluted point was recovered at Site 28WR7 during installation of a flag pole on the camp plaza. Kraft (1968:17) reported that Junius Bird conducted excavations at this site, but found no additional Paleo-Indian materials. Extensive Archaic and Woodland artifacts, pits, hearths, post holes and burials have also been recovered from Site 28WR6, west of the project area (Slosberg 1962; Kraft 1968, 1976a, 1976b). This site is within several hundred feet of the project area, although at a lower terrace level and closer to Mine Brook and the Delaware River (Otter 1992:Appendix I). The presence of Sites 28WR6 and 28WR7 initially indicated the possibility that additional archeological sites may exist within the proposed project area.

3.2 Historic Overview

A few historical references to copper mining have been reported from the 18th and early 19th centuries (Bertland 1975:39-41). The first well-documented mining operation was conducted in 1849 by the Pahaquarry Mining Company (Bertland 1975:42). From 1850 to 1863, the Philadelphia firm Godleys owned the Pahaquarry Mines. The Allegheny Mining Company was organized in 1861, but conducted only intermittent assaying during the late 19th century (Durling 1927:14; Bertland 1975:42). The final period of intensive mining occurred between 1903-1911 by the Montgomery Gold Leaf Mining Company. A boarding house is portrayed west of the mill house on a 1904 map of the Pahaquarry area, possibly near the northern project area (reproduced in Otter 1992:8). A 200-ton mill, two 40-foot "shaft" furnaces, and a double-track tramway from the quarry to the mill were constructed, but the mine was quickly abandoned after the method of copper separation proved unprofitable (Cornwall 1945:1; Figure 3). As illustrated in Figure 3, mine operations do not appear to have extended into the project area.

The property was purchased in 1925 by the George Washington Council of the Boy Scouts of America. The Pahaquarra Scout Reservation operated through 1971. Durling (1927) presents a description of the early Boy Scout camp, while an unscaled map (Anonymous 1968) portrays facilities during the later term of the camp operations (Figure 4). The Health Lodge, Trading Post and Ranger Station were located near the proposed northern parking area, while a trail to the Chapel probably crossed the proposed southern parking area. Most structures were removed by the U.S. Army Corps of Engineers in anticipation of construction of the Tocks Island Dam and Reservoir.

The proposed height of the Tocks Island Reservoir would have approached the elevation of the Pahaquarry mine tunnels and would have inundated the present project area (Brown 1973:49). Extensive prehistoric and historic sites along lower terraces, closer to the Delaware River, would have also been flooded.

4.0 SURVEY METHODOLOGY AND RESULTS

4.1 Survey Methodology

Phase I archeological investigations were conducted under specifications of the NPS Scope of Services for Work Order No. 14; DEWA 264-42, 2001-0491-402. Work tasks are presented in Table 1. Phase I investigations included surface reconnaissances, systematic shovel test excavations, and deep auger testing within two sampling areas. Surface reconnaissance involved searching for above-ground artifacts, features, and historical architectural remnants within the two proposed parking areas. Shovel test units (STUs) were excavated at 20-foot intervals along parallel transects. In accordance with the scope of work, shovel test units were 1-foot diameter in size and were excavated to depths of 3 feet unless inhibited by impenetrable deposits. Excavated soils were screened through 1/4-inch mesh hardware cloth to ensure the uniform recovery of cultural materials. A minimum of 10 STUs were to be excavated within each of the proposed parking areas. In addition, deep, stratigraphic testing prescribed two, 10-foot deep, 4-inch diameter bucket-auger borings within each testing area. The locations of STUs and auger borings were determined by JMA archeologists based on field observations. Deep auger borings were inhibited by cobble deposits. Stratigraphic records of Munsell soil color, texture, inclusions, and depths were recorded for each STU and auger test hole.

Survey datum points were established by driving nails into the bases of trees at the margins of the respective testing areas. STU transects were then established by pocket-transit lines along magnetic north orientations at 20-foot intervals. When artifacts were recovered, radial STUs were excavated at 10-foot intervals to determine artifact density and site boundaries. Each STU was assigned a tripartite number (e.g., 1.2.3). This numbering system consisted of the area number (1), the transect number (2), and the shovel test unit number (3). Radial shovel tests were labelled with the tripartite number (e.g., 1.2.3) plus R-1 through R-4, where R-1 corresponded to the radial STU excavated north of the original positive shovel test and succeeding numbers (e.g., R-2 through R-4)

corresponded to shovel test units excavated in a clockwise fashion around the positive shovel test unit.

4.2 Survey Results

4.2.1 *Area 1: South Parking Area*

The proposed south parking lot (Area 1) encompassed an area of 5000 square feet, east and south of Old Mine Road and south of the Kittatinny Ridge spur. Surface reconnaissance revealed a cobble-lined walkway with mortared fieldstone piers south and west of the project area. One pier is within the west end of the proposed south parking area. The walkway led upslope from Old Mine Road to a cobble and cinder-block foundation, and a poured-concrete floor. The floor, which measured 12 by 13.5 feet, had the inscription "Post 18" in the southwest corner. Reference to the 1968 map of the Pahaquarra Scout Reservation suggests that this structure was probably the Chapel (Figure 4). A surface scatter of glass, corroded cans and other debris was also observed across the project area, probably resulting from roadside dumping along Old Mine Road rather than middens associated with the Chapel.

A survey datum (N0/E0) was established by driving a flagged nail into the base of a prominent maple tree located along the base of the spur slope, at the east end of the survey area. The area to be tested was covered by dense shrubs (Plate 1), and three south-north STU transect lines were cut through the underbrush at S10/W10, N0/W30, and N0/W50 from datum (Figure 5). A total of 12 STUs were excavated in the south parking area (Figure 5, Table 2). Two deep auger borings were also excavated; Boring 1 was located at S10/W10, while Boring 2 was at N30/W50.

Area 1 soil profiles were generally similar among STUs and deep auger borings. The surface horizon, which consists of a 0.75- to 2.00-foot stratum of dark yellowish brown (10YR3/6), fine, sandy loam with extensive roots, overlies a stratum of strong brown (7.5YR4/6) fine sand, which

extended to a depth of approximately 3.30 feet below surface (Figure 6a). The two borings indicated that a mottled sandy silt extends to a depth between 4.8 (Boring 2) and 7.9 (Boring 1) feet below surface before increasing amounts of gravel and cobbles prevented further auger excavations. In the more northerly STUs (e.g., 1.1.4) (i.e., closer to Old Mine Road), cobbles and sub-angular gravels were more common at shallow depths (between 0.9 and 2.00 feet) (see Figure 6b). The predominance of fine-grained sandy silts suggests low-energy river deposits south and east (downstream) from the ridge spur. Larger gravels and cobbles increase toward the north, where stream-flood energy was greater.

A single tertiary flake of chert was recovered from the upper soil unit (0.00-0.09 feet deep) of STU 1.1.4. Radial STUs (1.1.4 R-3 and 1.1.4 R-4) encountered no additional artifacts. This single artifact is not sufficient to define a new archeological site and probably reflects an isolated artifact location or is related to Site 28WR6.

4.2.2 *Area 2: North Parking Area*

Area 2 was located north of the Kittatinny Ridge spur in an area of open forests (Plate 2). Soils were markedly different than in Area 1. Large (0.5-1.0-foot) cobbles were common across the surface. Three circular rock clusters were also observed (see Figure 7). These features, which ranged between 2.75 and 5.50 feet diameter and included between 10 and 50 rocks and cinder-block fragments, probably represent recent fire hearths. The 1968 map of the Pahaquarra Scout Reservation (Figure 4) suggests that the Health Lodge, Trading Post, and Ranger Station were close to the northern project area, although remains of these buildings were not apparent. An access road had been graded across the north end of the project area, and soil disturbances included backhoe trenches on each side of the access road gate.

A site datum (N0/E0) was established by a nail driven into the base of a maple tree at the base of the spur slope, near the southwestern corner of the project area (Figure 7). Three west-east STU transects were surveyed between the base of the ridge in the south, the National Park Service access road in the north, and Old Mine Road to the west, respectively (Plate 2).

All STUs had an abundance of sub-angular gravels and large 0.5- to 0.8-foot cobbles within the upper 0.75 to 1.50 feet of very dark grayish brown (10YR3/2) sandy loam. The percentage of large cobbles increased within the underlying dark yellowish brown (7.5YR4/6) sandy silt. Because of the impenetrable cobbles, no STU was excavated deeper than 2.5 feet below surface (Table 2). Figure 8a illustrates a representative shovel test from Area 2.

In the western corner of the survey area (STU 2.1.1 to 2.2.2), a very dark greyish brown (10YR3/2) sandy loam was overlain with probable colluvial deposits. This probable slope wash was slightly lighter in chroma and value (10YR4/6) and had fewer large cobbles than the deeper sandy silt loam. Shovel test 2.1.1, illustrated in Figure 8b, depicts a soil profile with colluvial materials overlying the original surface horizon. One chert flake was recovered in STU 2.2.1 from the underlying very dark grayish brown (10YR3/2) fine sandy silt loam, but additional STUs (2.2.1 R-2 and 2.2.1 R-3) encountered only two wire nails and one piece of plastic, but no additional prehistoric artifacts.

STU 2.2.5, at the far eastern end of the survey area, produced a large collection of recent artifacts, which included two modern ceramic fragments, one green bottle base, two clear rectangular bottle fragments, one clear ridged table glass fragment, two clear curved bottle glass fragments, seven flat window glass fragments, one flat metal piece, one low-fired brick fragment, and one piece of coal. All of these artifacts werre determined during analysis to be modern; therefore, they were discarded. One secondary flake of chert was also present in the humus. Four radial shovel tests

were excavated at 10 foot intervals around STU 2.2.5 to examine the extent of the artifact distribution. Although one additional fragment of bottle glass (2.2.5 R-2), and three fragments of flat window glass (2.2.5 R-3; 2.2.5 R-4) were encountered, no additional prehistoric artifacts were found. The diversity of architectural and domestic items may indicate a localized midden or destruction debris from the Boy Scout camp. However, the historic artifacts may also indicate dumping or trash associated with the two rock clusters (fire hearths) located to the south.

In summary, no cultural resources relating to the 19th- to early 20th-century operation of the Pahaquarry copper mines were observed within the project area during Phase I testing. Recovered historic artifacts are probably attributable to the 20th-century operation or destruction of the Pahaquarra Boy Scout camp. Two prehistoric chert flakes were recovered in the northern parking area (Area 2). The excavation of radial shovel tests produced negative results, suggesting these artifacts represent isolated artifact locations or are related to the previously recorded site 28WR6. Prehistoric materials probably increase toward the north and east, closer to Mine Brook and 28WR6.

5.0 SUMMARY AND RECOMMENDATIONS

A program of archeological testing was conducted by John Milner Associates, Inc. (JMA) prior to the proposed parking area relocation at the Pahaquarry Copper Mines National Register District, Delaware Water Gap National Recreation Area, New Jersey. The proposed north and south parking areas were separated by a ridge spur of Kittatinny Mountain, which occupy a possible kame terrace at an elevation of approximately 350 feet above sea level. These terraces lie approximately 50 feet above the modern course of the Delaware River.

Although Work Order No. 14 (DEWA 264-42, 2001-0491-402) defined a total of 20 STUs and four deep auger test borings within Area 1 and Area 2, Phase I investigations included a pedestrian survey and the excavation of 28 STUs, and 4 deep auger probes. The depths of excavations were dictated by geomorphic conditions and varied between the two areas. The northern parking area (Area 2) included dense cobble deposits, probably resulting from high-energy colluvial deposits and terrace formation. In contrast, the south parking area (Area 1), downstream and sheltered by the ridge spur, contained sandy silts and fewer gravels and cobbles, allowing 3-foot-deep STU excavations. These deposits probably represent low-energy deposits which extend to depths of 5 to 8 feet below the modern surface. Wagner (1992) speculates that terrace deposits above the 350-foot contour may represent kame terraces of Wisconsin age.

Archeological testing of the northern parking area encountered a scatter of 20th-century ceramics, glass and nails, and other objects, associated with the operation or destruction of the Pahaquarra Scout Reservation. Three rock clusters, all including broken cinder blocks, were also observed. These probably date to the period of camp destruction or represent fire hearths. Partial remains of the Boy Scout camp were observed at the south parking area, where a cobble-lined path and mortared stone piers leading upslope to a stone and cinder-block foundation were observed during the reconnaissance survey. This foundation may be the remains of the Boy Scout camp Chapel.

One stone pier extends into the west end of the south parking area. No earlier materials clearly attributable to the Pahaquarry copper mines were discovered during STU testing.

Three prehistoric artifacts, secondary chert flakes, and no subsurface prehistoric features were discerned. This is a low recovery rate for prehistoric materials. Much more extensive Archaic and Woodland occupations, including Native American burials, have been defined at Site 28WR6, to the north and west of the project area. Additional archeological testing should be conducted if parking area development impacts areas to the north or west of Old Mine Road.

In summary, 28 STUs and four bucket-auger borings were conducted within two testing areas. STU excavations encountered a total of three prehistoric chert flakes in addition to 20th-century ceramics, metal, window and bottle glass, probable fire hearths, and above-ground structures relating to the 20th-century Boy Scout camp on the property. No definitive archeological sites were identified in the Phase I survey. Although archeological finds were not impressive, the extensive numbers of structures from the Pahaquarra Scout Reservation, beyond the project area limits, should be evaluated as contributing resources of the historic district. The proposed parking lot development will not impact significant cultural resources within the two areas tested by JMA, and no additional field testing is recommended.

One major historical question concerning the Pahaquarry is whether 17th-century Dutch actually mined at this site and whether archeological resources associated with colonial exploitation of the quarry may be expected within the Old Mine Road National Historic District. Phase I investigations revealed no evidence for 17th-century or later colonial occupations. However, historical research encountered a reference to extant colonial ore samples curated in the Dutch National Museum, Amsterdam (Durling 1927:8). A program of trace-element analyses of Pahaquarry and museum ore specimens may elucidate whether the Dutch actually mined these

deposits and whether archeological resources from this period should be expected in the project vicinity.

6.0 REFERENCES CITED

Anonymous
1968 *Camping Facilities Brochure*. George Washington Council, Boy Scouts of America, Trenton, N.J.

Bertland, Dennis N.
1975 *The Minisink, A Chronicle of One of America's First and Last Frontiers*. Four County Task Force on the Tocks Island Reservoir, Stroudsburg, PA.

Brown, Lenard E.
1973 *Historical Base Map, Delaware Water Gap National Recreation/ New Jersey*. National Park Service, Denver Service Center.

Cornwall, H.R.
1945 *Pahaquarry Copper Mine, Pahaquarry, N.J.* United States Department of Interior Geological Survey, Wartime Program Open File.

Durling, William D.
1927 *The Old Mine Holes and the Old Mine Road*. Privately published, Trenton, N.J.

Kraft, Herbert C.
1968 *Archaeological Survey and Testing in the Construction of the Tocks Island Dam*. National Park Service Purchase Order 950-346. Seton Hall University.

1976a *The Archaeology of the Pahaquarry Site*. Archaeological Research Center, Seton Hall University.

1976b *Supplement To: The Archaeology of the Pahaquarry Site, Warren County, New Jersey*. Seton Hall University.

Otter, Edward
1992 *Pahaquarry Copper Mines Background Research*. Prepared for National Park Service, Denver Service Center, Order Number 1443PX200092079.

Slosberg, Willard
1962 *Test Excavations at the Pahaquarry Boy Scout Site and the Friedmann Site in the Tocks Island Reservoir Area*. Unpublished manuscript, New Jersey State Museum.

United States Geological Survey (USGS)
1973 *Bushkill, PA-NJ Quadrangle*. USGS, Reston, VA.

Wagner, Daniel P.
1992 Pedological and Geomorphological Investigations, Delaware Water Gap National Recreation Area, Camp Weygadt Visitor Center and Site Development Facilities. Report submitted to John Milner Associates, Inc., West Chester, PA. Prepared by Geo Science Consultants, Inc., College Park, MD.

TABLES

TABLE 1.

Summary of Fieldwork Elements

SUMMARY OF FIELDWORK ELEMENTS		
Task	Purpose	Archeological Testing (placement of units at discretion of contractor; not to exceed 20-foot radius interval between units)
1 (North Area)	To identify whether cultural resources exist within the proposed parking area	10 three-foot deep, one-foot diameter TUs 2 ten-foot deep, one-foot diameter TUs (c. 7800 sq. ft. test area)
2 (South Area)	To identify whether cultural resources exist within the proposed parking area	10 three-foot deep, one foot diameter TUs 2 ten-foot deep, one-foot diameter TUs (c. 5000 sq. ft. test area)
Summary Quantities		20 three-foot deep, one-foot diameter TUs 4 ten-foot deep, one-foot diameter TUs (c. 12,800 sq. ft. total area)

Note: *A combination of shovel excavation and auger coring may be used to achieve the specified depths. Auger cores will not be smaller than 4-inch diameter. Auger and upper unit diameters will be recorded. Depth of units may be shallower should cobble deposits, bedrock, or wet soils be encountered. Reasons for units shallower than specified should be noted. Locations of all test units should be mapped.

+ Soils within the test area are classified as Hazen gravelly loam, 8 to 15 percent slopes. These soils consist of 6 inches of very dark grayish brown, gravelly loam; 22 inches of yellowish-brown and dark brown, gravelly loam; and 42 inches or more of stratified layers of dark brown gravelly sand. Depth to bedrock is more than 6 feet.

TABLE 2.

Pahaquarry Copper Mines, Phase I Archeological Survey: Soil Descriptions and Artifact Inventories

A. Area 1: South Parking Area.

STU	Proven	Depth	Soils	Artifacts
1.1.1.	S20W10	0.00-1.25	Fine sandy loam (10YR3/6)	None
		1.25-3.00	Slight clay and fine sand (7.5YR4/6)	None
1.1.2.	N0W10	0.00-1.18	Fine sandy loam (10YR3/6)	None
		1.18-3.00	Fine sand (7.5YR4/6)	None
		3.00-3.25	Silt (10YR6/4)	None
1.1.3.	N20W10	0.00-1.25	Fine sandy loam (10YR3/6)	None
		1.25-2.00	Fine sand (7.5YR4/6), large cobbles (3-5"), abundant sub-angular gravel	None
		2.00-3.00	Slightly silty fine sand (10YR4/6), common sub-angular gravel	None
1.1.4.	N40W10	0.00-0.90	Fine sandy loam (10YR3/6)	1 chert tertiary chip
		0.90-1.60	Fine sand (7.5YR4/6), large cobbles and abundant sub-angular gravel	None
		1.60-3.00	Fine sand (7.5YR4/6), common sub-angular gravel	None
		3.00-3.25	Sandy silt (10YR4/6)	None
1.1.4 R-1	N50W10		Unexcavated Road disturbance	
1.1.4 R-2	N40W0		Unexcavated Road disturbance	
1.1.4 R-3	N30W10	0.00-0.75	Fine sandy-silt loam (10YR3/6) with moderate sub-angular gravel	None
		0.75-1.25	Fine silty-sand and large cobbles, stopped on rock	None
1.1.4 R-4	N40W20	0.00-0.75	Fine sandy-silt loam (10YR3/6) with moderate sub-angular gravel	None
		0.75-2.00	Fine silty-sand (10YR5/6), abundant sub-angular gravel	None
		2.00-3.00	Fine sand (7.5YR4/6), common sub-angular gravel	None
1.2.1	N0W30	0.00-1.00	Fine sandy loam (10YR3/6)	None
		1.00-3.00	Fine sandy-silt (7.5YR4/6), rare sub-angular gravel	None
		3.00-3.20	Fine silt (10YR6/4)	None

A. Area 1: South Parking Area.

STU	Proven	Depth	Soils	Artifacts
1.2.2	N20W30	0.00-1.50	Fine sandy-silt loam (10YR3/6), rare sub-angular gravel	None
		1.50-3.00	Fine silty sand (7.5YR4/6)	None
		3.00-3.25	Silt (10YR6/4), rare gravel	None
1.2.3	N40W30	0.00-1.50	Fine sandy-silt loam (10YR3/6), moderate sub-angular gravel with rare cobbles	None
		1.50-3.00	Fine silty sand (7.5YR4/6), rare sub-angular gravel	None
1.3.1	N0W50	0.00-1.00	Fine sandy loam (10YR3/6), moderate sub-angular gravel	
		1.00-3.00	Fine silty-sand (7.5YR4/6), common sub-angular gravel, large cobbles at bottom	None
1.3.2	N20W50	0.00-1.00	Fine sandy loam (10YR3/6), moderate sub-angular gravel	None
		1.00-3.00	Fine silty-sand (7.5YR4/6), rare sub-angular gravel, one cobble in bottom	None
1.3.3	N40W50	0.00-1.30	Fine sandy loam (10YR3/6), moderate sub-angular gravel	None
		1.30-3.00	Fine silty-sand (7.5YR4/6), rare sub-angular gravel	None
Area 1 Boring 1	S10W0	0.00-0.90	Fine sandy-silt loam (10YR4/6)	None
		0.90-3.30	Silty-sand (10YR5/4)	
		3.30-4.60	Mottled silt (10YR6/4 and 10YR5/4)	
		4.60-7.90	Silty-sand (10YR6/4)	
		7.90	Stopped on rock	
Area 1 Boring 2	N30W50	0.00-1.00	Sandy-silt loam (10YR3/6)	
		1.00-3.30	Sandy-silt (7.5YR4.6)	
		3.30-4.80	Mottled sandy-silt (7.5YR5/6 and 10YR6/4)	None
		4.80	Stopped on rock	

B. Area 2: North Parking Area.

STU	Proven	Depth	Soils	Artifacts
2.1.1	N20E0	0.00-1.50	Fine sandy loam (10YR4/6), moderate sub-angular gravel	None
		1.50-1.90	Fine sandy loam (10YR3/2), moderate sub-angular gravel, abundant (3-5") cobbles	None
		1.90-2.20	Clay-sand (10YR4/6), abundant sub-angular gravel,cobbles	None
		2.20	Stopped on large cobbles	
2.1.2	N20E20	0.00-1.25	Fine sandy loam (10YR4/6), moderate sub-angular gravel	None
		1.25-1.75	Fine sandy loam (10YR3/2), abundant sub-angular gravel and cobbles	None
		1.75-2.50	Clay-sand (7.5YR4/6), abundant cobbles	None
		2.50	Stopped on large cobbles	
2.2.1	N40W20	0.00-1.50	Fine sandy loam (10YR4/6), abundant sub-angular gravel	None
		1.50-1.75	Fine sandy loam (10YR3/2), abundant gravel and cobbles.	1 chert tertiary flake
		1.75-2.50	Clay-sand (7.5YR4/6), abundant cobbles	None
		2.50	Stopped on large cobbles	
2.2.1 R-1	N50W20		Unexcavated Road disturbance	
2.2.1 R-2	N40W10	0.00-1.25	Fine silty-sand loam (10YR4/6), abundant sub-angular gravel	1 wire nail
		1.25-1.75	Silty-sand (10YR3/2), abundant gravel and cobbles	None
		1.75-2.00	Clay-sand (7.5YR4/6), abundant cobbles	None
		2.00	Stopped on large cobbles	
2.2.1 R-3	N30W20	0.00-1.25	Fine silty-sand loam (10YR4/6), moderate sub-angular gravel	1 wire nail, 1 clear plastic
		1.25-1.75	Silty-sand (10YR3/2), abundant gravel and cobbles	None
		1.75-2.00	Clay-sand (7.5YR4/6), abundant cobbles	None
		2.00	Stopped on large cobbles	
2.2.1 R-4	N40W30		Unexcavated Road disturbance	
2.2.2	N40E0	0.00-1.25	Fine sandy loam (10YR4/6), abundant sub-angular gravel	None
		1.25-1.75	Fine sand (10YR3/2), abundant cobbles	None
		1.75-2.20	Find sand (7.5YR4/6), abundant large (.5-.8') cobbles	None
		2.20	Stopped on large cobbles	

B. Area 2: North Parking Area.

STU	Proven	Depth	Soils	Artifacts
2.2.3	N40E20	0.00-0.90	Fine sandy loam (10YR4/6), abundant sub-angular gravel	None
		0.90-1.50	Fine silty-sand (7.5YR4/6), abundant large cobbles	None
		1.50	Stopped on large cobbles	
2.2.4	N40E40	0.00-1.00	Fine sandy loam (10YR4/6), abundant sub-angular gravel	None
		1.00-1.50	Fine sand (7.5YR4/6), abundant large cobbles	None
		1.50	Stopped on large cobbles	
2.2.5	N40E60	0.00-1.00	Fine sandy loam (10YR4/6), abundant sub-angular gravel Artifacts: 1 chert secondary flake, 2 whiteware, 1 green bottle base, 2 clear rectangular bottle fragments, 1 clear ridged table glass fragment, 2 clear curved bottle glass fragments, 7 flat glass fragments, 1 flat metal, 1 low-fired brick fragment, 1 coal (all historic artifacts were modern and therefore discarded during analysis)	
		1.00-2.00	Fine sand (7.5YR4/6), abundant sub-angular gravel and large cobbles	None
		2.00	Stopped on large cobbles	
2.2.5 R-1	N50E60	0.00-1.00	Fine silty-sand loam (10YR4/6), cobbles, abundant sub-angular gravel	None
		1.00-1.25	Clay-sand (7.5YR4/6), abundant sub-angular gravel and large cobbles	None
		1.25	Stopped on large cobbles	
2.2.5 R-2	N40E70	0.00-1.00	Fine silty-sand loam (10YR4/6), cobbles, abundant sub-angular gravel	1 clear bottle glass
		1.00-1.50	Clay-sand (7.5YR4/6), abundant sub-angular gravel and large cobbles	None
		1.50	Stopped on large cobbles	
2.2.5 R-3	N30E60	0.00-1.00	Fine silty-sand loam (10YR4/6), abundant sub-angular gravel	1 flat glass
		1.00-1.25	Clay-sand (7.5YR4/6), abundant sub-angular gravel	None
		1.25	Stopped on large cobbles	
2.2.5 R-4	N40E50	0.00-1.00	Fine silty-sand loam (10YR4/6), cobbles, abundant sub-angular gravel	2 flat glass
		1.00-1.25	Clay-sand (7.5YR4/6), abundant sub-angular gravel and cobbles	None
		1.25	Stopped on large cobbles	

B. Area 2: North Parking Area.

STU	Proven	Depth	Soils	Artifacts
2.3.1	N60E20	0.00-0.80	Fine silty-sand loam (10YR3/2), abundant sub-angular gravel, cobbles	None
		0.80-1.25	Silty-sand (7.5YR4/6), abundant cobbles	None
		1.25	Stopped on large cobbles	
2.3.2	N60E40	0.00-0.75	Fine silty-sand loam (10YR3/2), abundant sub-angular gravel, cobbles	None
		0.75-1.10	Silty-sand (7.5YR4/6), abundant cobbles	None
		1.10	Stopped on large cobbles	
2.3.3	N60E60	0.00-0.75	Fine silty-sand loam (10YR3/2), abundant sub-angular gravel, cobbles	None
		0.75-1.25	Silty-sand (7.5YR4/6), abundant cobbles	None
		1.25	Stopped on large cobbles	
Area 2 Boring 1	N0E20	0.00-0.50	Fine silty-sand loam (10YR3/2)	None
		0.50-1.00	Silty-sand (7.5YR4/6)	
		1.00	Stopped on large cobbles	
Area 2	N80E20	0.00-0.60	Fine silty-sand loam (10YR3/2)	None
		0.60	Stopped on large cobbles	

FIGURES

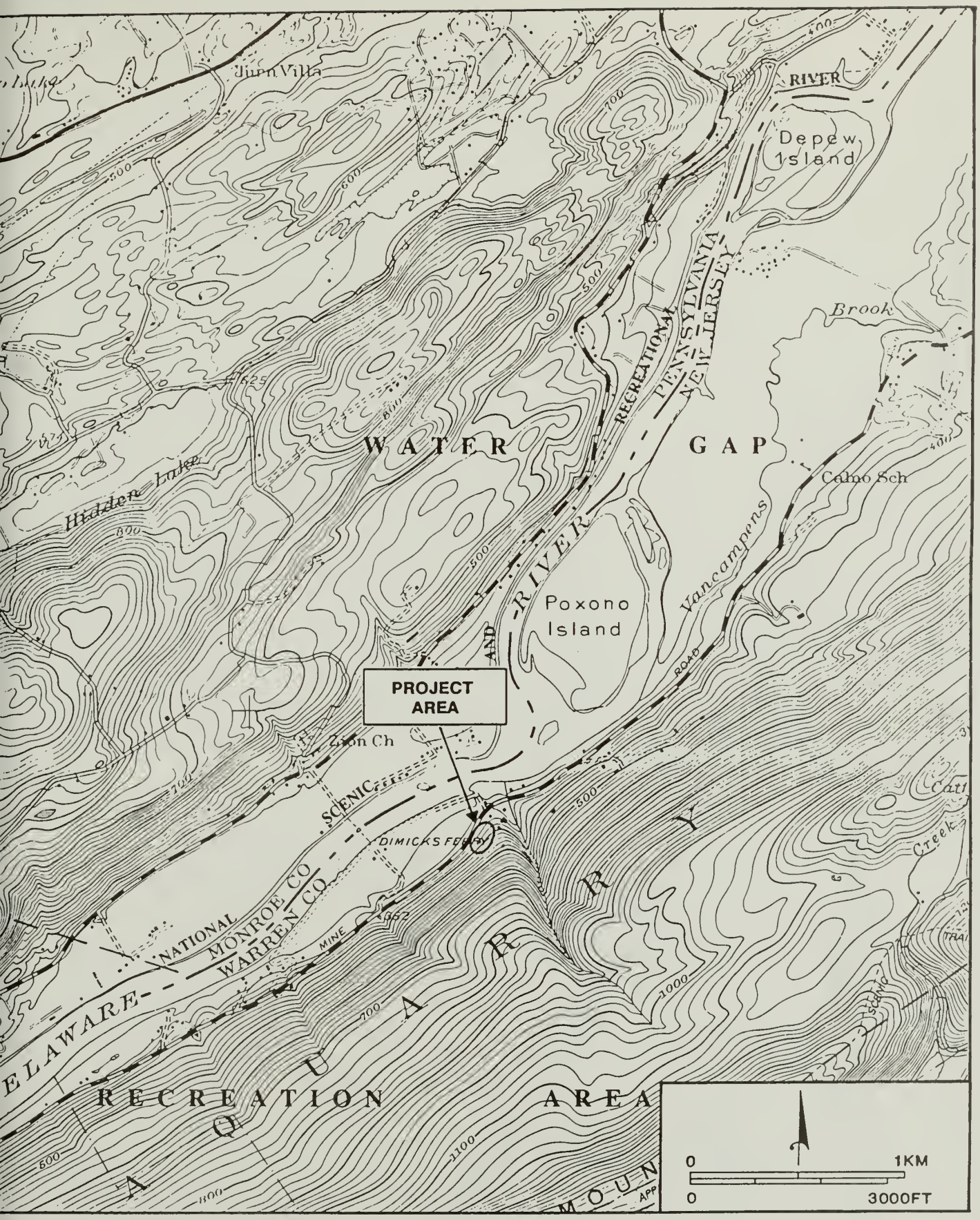

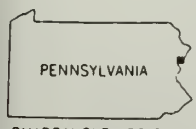

Project Location (Detail of Bushkill, PA-NJ, 7.5 Minute Quadrangle; USGS Photorevised 1983)

Figure 1

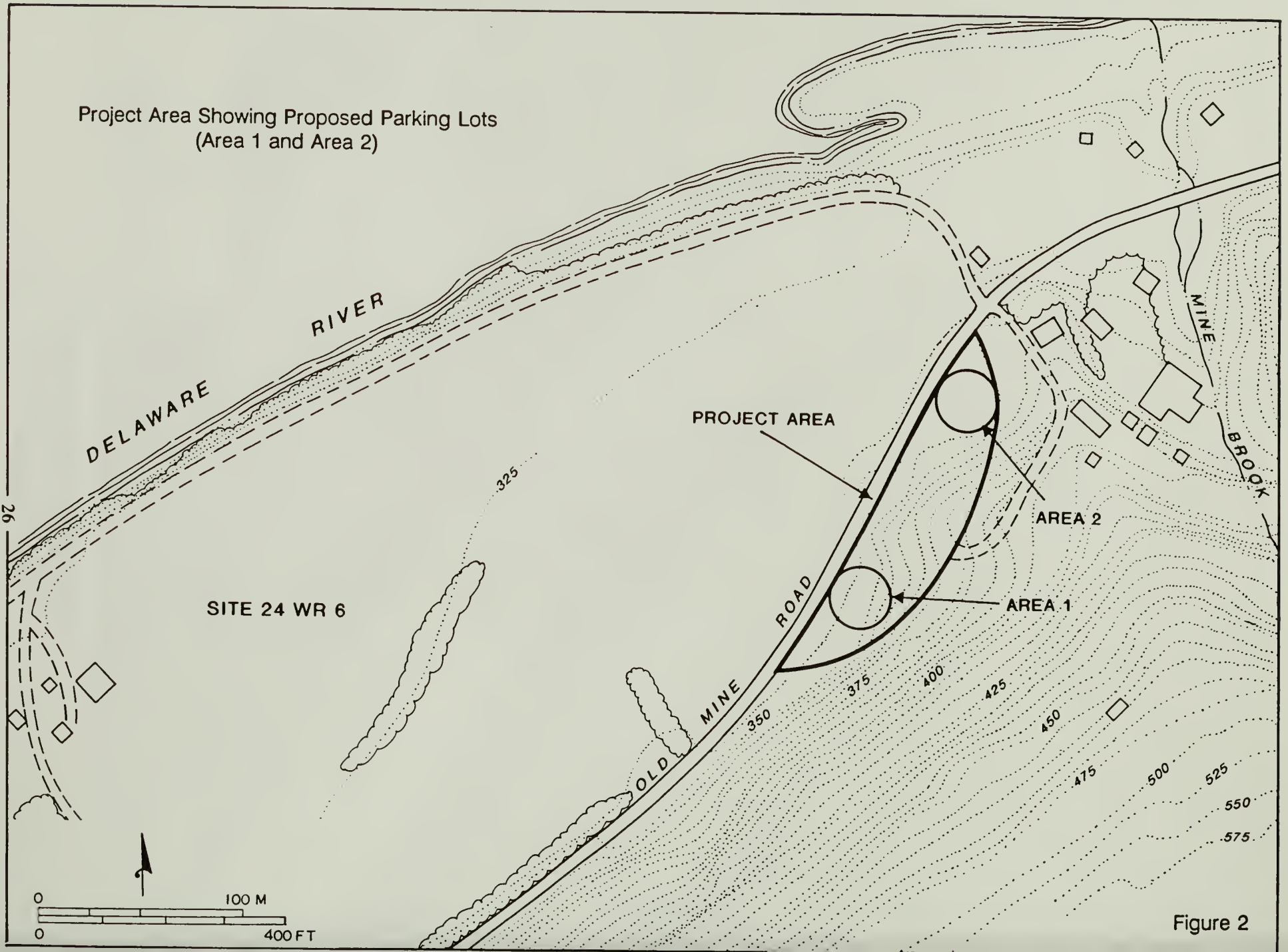
Project Area Showing Proposed Parking Lots
(Area 1 and Area 2)
DELAWARE RIVER
PROJECT AREA
AREA 2
AREA 1
SITE 24 WR 6
OLD MINE ROAD
MINE BROOK
325
350
375
400
425
450
475
500
525
550
575
0
100 M
0
400 FT

Figure 2

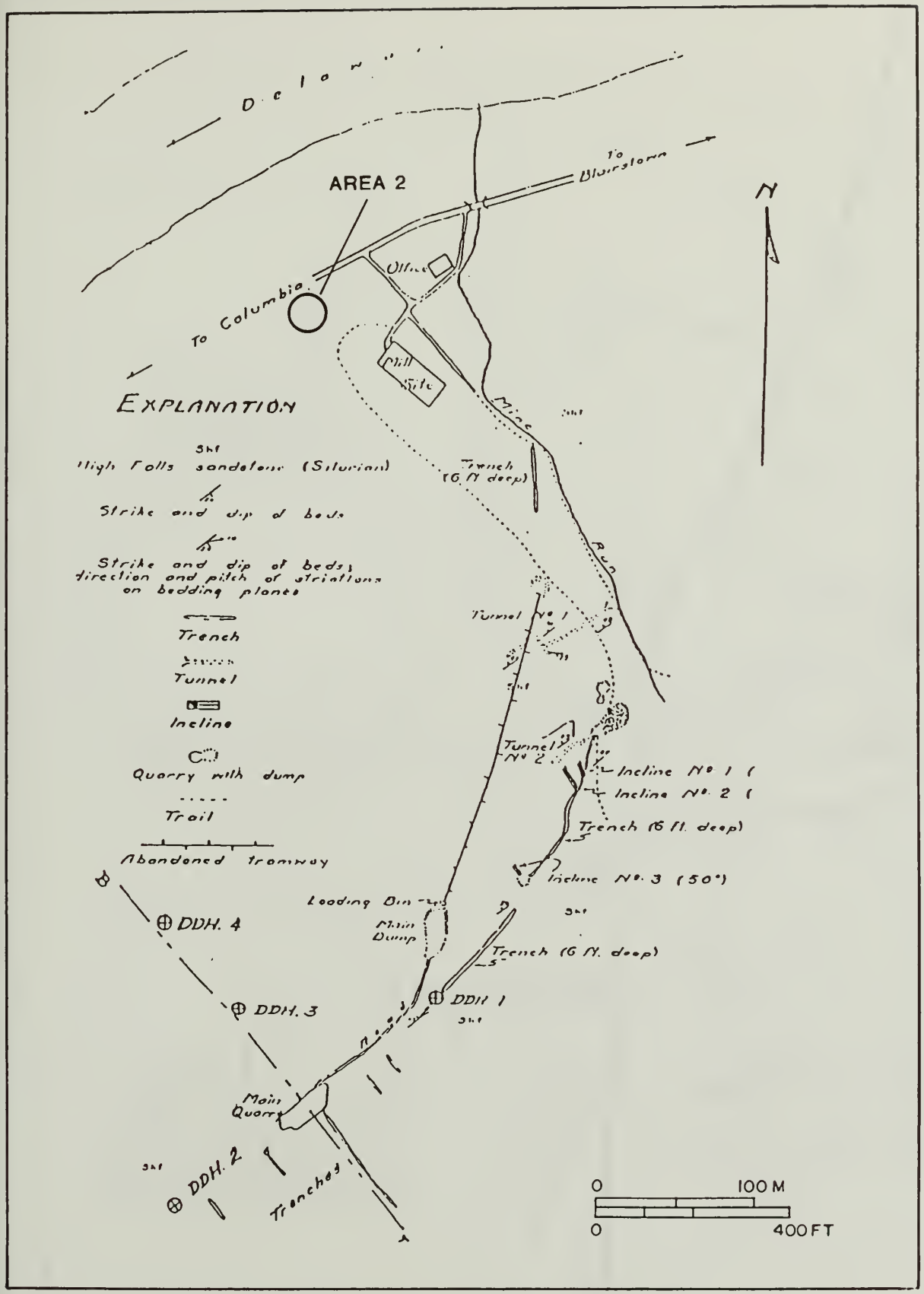

Detail of *Pahaquarry Copper Mines* (after Cornwall 1945) Showing 20th-Century Mining Structures, Tunnels, and Trenches and Proposed North Parking Area (Area 2)

Figure 3

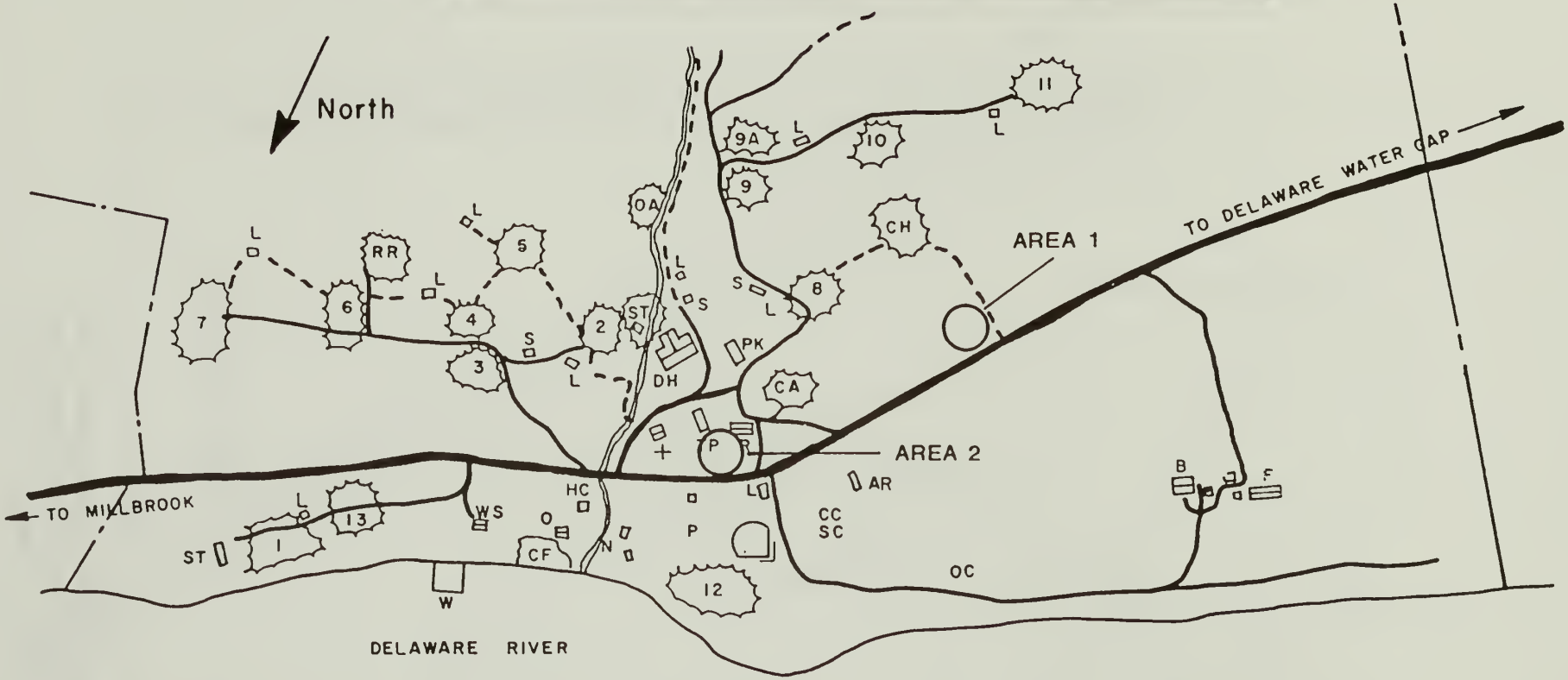

LEGEND

CAMPSITES	CAP
1 WIHINAK	28
2 ELEMIECHEN	30
3 MINSI	16
4 SCHWANGI CABINS	16
5 WAPENEAU CABINS	28
6 UNAMI	30
7 BISCHUI CABINS & TENTS	40
8 CREE	28
9 NETOP CABINS	
9A NETOP TENTS	24
10 CHICAGOMI	26
11 UNILACHTIGO	22
12 DELAWARE	22
13 SIOUX	24

+ HEALTH LODGE	OA ORDER OF THE ARROW CIRCLE
AR ARCHERY	OC OBSTACLE COURSE
B BARN STORAGE	P PARKING, PARADE FIELD
CA COOKOUT AREA	PK POP KELLER LODGE
CC CAMPCRAFT	R RANGER
CF CAMPFIRE	RR RIFLE RANGE
CH CHAPEL	S SHOWERS
DH KERNEY DINING HALL	SC SCOUTCRAFT
F FARMHOUSE	ST STAFF
HC HIKE CENTER	TP TRADING POST
L LATRINE	W WATERFRONT
N NATURE	WS WINKIE SHACK
O OFFICE	

Detail of Pahaquarra Scout Reservation (Anonymous 1968) Showing Camp Structures and Approximate Location of Area 1 and Area 2

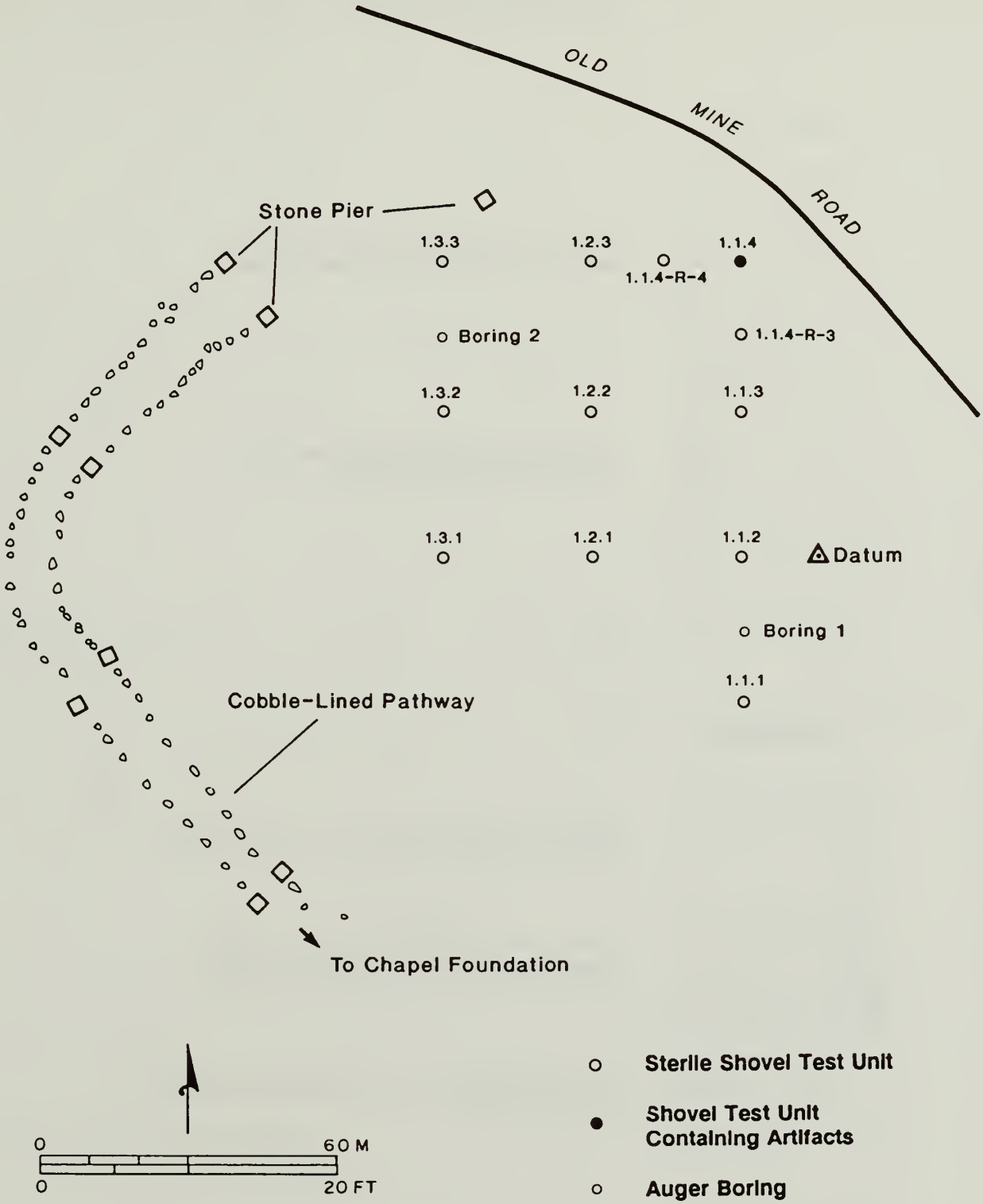

Area 1, South Parking Area Showing
Shovel Tests and Boring Locations

Figure 5

Representative Shovel Tests and Soil Descriptions from Area 1

1.1.1
South Profile

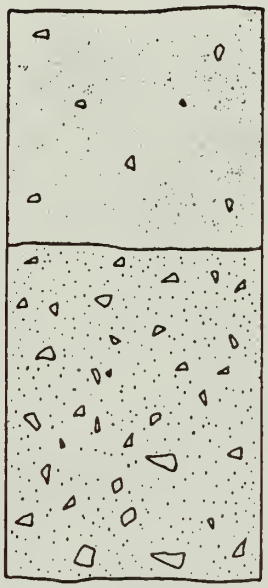

10YR3/6 dark yellowish brown, fine sandy loam with rare subangular gravel

7.5YR4/6 strong brown, fine sand with common subangular gravel

Figure 6a

1.1.4
North Profile

10YR3/6 dark yellowish brown, fine sandy loam with rare subangular gravel

7.5YR4/6 strong brown, fine sand with large cobbles and abundant subangular gravel

7.5YR4/6 strong brown, fine sand with common subangular gravel

10YR4/6 strong brown, sandy silt

Figure 6b

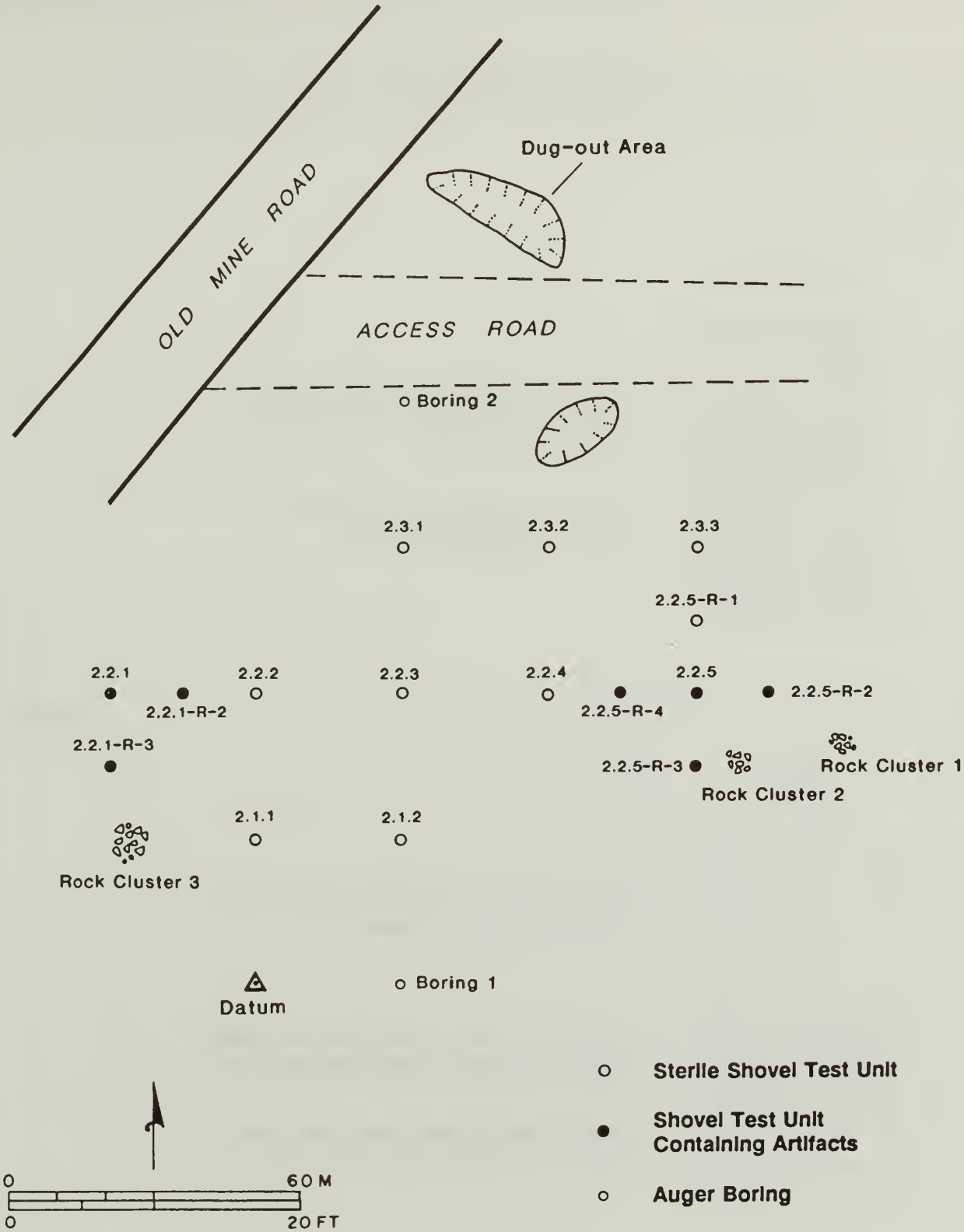

Area 2, North Parking Area Showing
Shovel Tests and Boring Locations

Figure 7

Representative Shovel Tests and Soil Descriptions from Area 2

2.2.5
East Profile

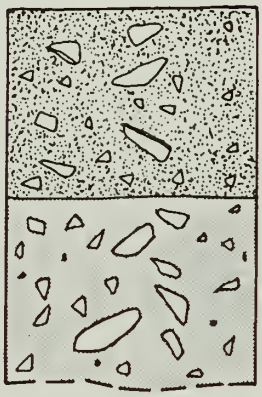

10YR3/2 very dark grayish brown, sandy loam with moderate subangular gravel and abundant cobbles

7.5YR4/6 strong brown, sandy silt with abundant subangular cobbles

Figure 8a

2.1.1
West Profile

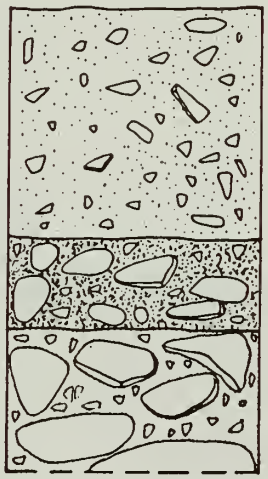

10YR4/6 strong brown, fine sandy loam with moderate subangular gravel

10YR3/2 very dark grayish brown, fine sandy loam with moderate subangular gravel and abundant cobbles

7.5YR4/6 strong brown, clayey sand with abundant subangular gravel

large cobbles

Figure 8b

PLATES

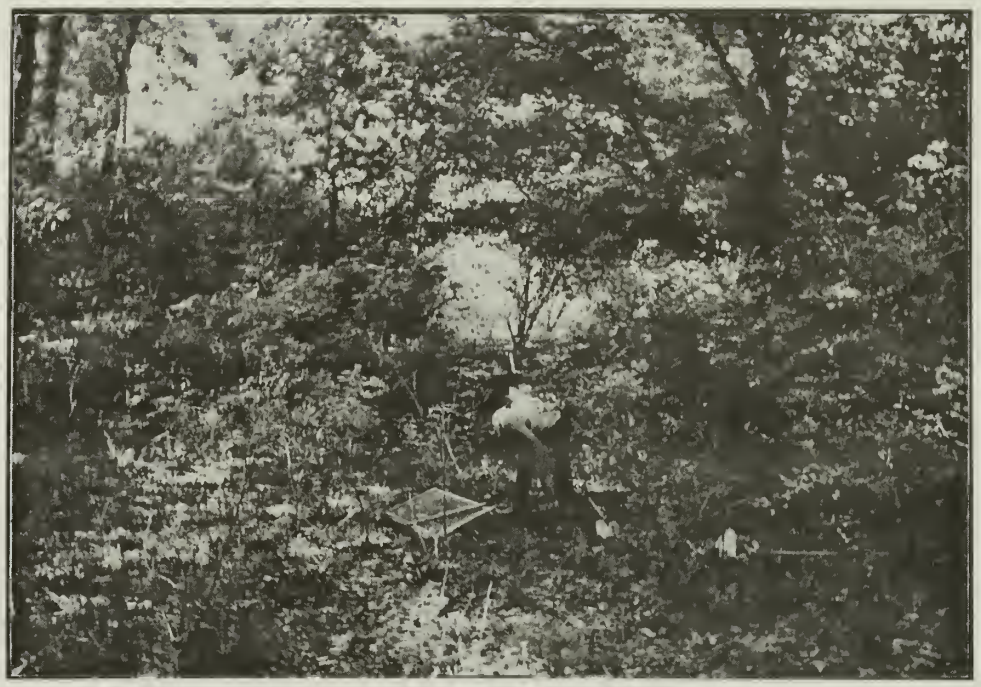

Plate 1. Area 1, South Parking Area from the Southeast (Datum at Base of Tree on the Left).

Plate 2. Area 2, North Parking Area from the South (Datum at Base of Tree on the Right).

As the Nation's principal conservation agency, the Department of the Interior has basic responsibilities to protect and conserve our land and water, energy and minerals, fish and wildlife, parks and recreation areas, and to ensure the wise use of all these resources. The Department also has major responsibility for American Indian reservation communities and for people who live in island territories under U.S. administration.

Publication services were provided by the Eastern Team-Falls Church Branch, Denver Service Center. NPS document D-136

APPENDIX H

United States Bureau of Mines. "Stabilization Plan at Pahaquarry Copper Mines Delaware Water Gap National Recreation Area." Denver: United States Bureau of Mines, November 1993.

United States Department of the Interior

NATIONAL PARK SERVICE
AIR QUALITY DIVISION
P.O. BOX 25287
DENVER, CO 80225

IN REPLY REFER TO:
March 3, 1994

N3615 (475)

Memorandum

To: Manager, Denver Service Center, Eastern Team
Attention: Steve Burns

Through: Miguel I. Flores
Chief, Monitoring and Data Analysis Branch
Air Quality Division - Denver

From : Bobby C. Carson
Air Quality Monitoring Systems Specialist, Air Quality Division - Denver

Subject: Radon Monitoring at Pahaquarry Copper Mine, Delaware Water Gap NRA

At the request of Mr. Steve Burns, Denver Service Center, Eastern Team, I reviewed the U.S. Bureau of Mines (BOM) radon monitoring report on Pahaquarry copper mine located at Delaware Water Gap National Recreation Area.

Radon (Rn^{222}) is a colorless, odorless, radioactive gas. Radon is released from the natural decay of uranium that is found in nearly all rocks and soils. As a result of this natural decay radon disintegrates into atomic sized particles called radon decay products or progeny. The radon progeny can attach to condensation nuclei, airborne dust, or float freely as unattached progeny. The primary concern to employee health is long-term exposure to radon progeny.

The Department of Labor, Mine Safety and Health Administration (MSHA) has an established radon progeny exposure standard (30 CFR) of 4.0 working level months (WLM) per calendar year. A working level month is defined as an exposure equivalent to 1.0 WL of radon progeny for 173 hours (a working month). For example, for an employee to reach 4.0 WLM in a calendar year it would require an exposure to 1.0 WL for 692 hours or an exposure to 0.50 WL for 1384 hours. If the average radon progeny concentration in the mine was 0.44 WL an employee could work in the mine for 1573 hours before reaching 4.0 WLM. However, mines are able to use active ventilation systems to control radon progeny concentrations and employee exposures.

The National Park Service has established a guideline for radon progeny sampling in NPS-14, Cave Radiation Safety and Occupational Health Management Guideline. The NPS-14 guideline adopted the MSHA 4 WLM per year maximum exposure standard. NPS-14 is currently under review by the National Park Service Division of Engineering and Safety Services. The Division of

Engineering and Safety Services is considering a reduction in the annual maximum exposure of 4.0 WLM per year to 3.0 WLM per year with a maximum lifetime exposure of 60 WLM over a 30 year period.

The Bureau of Mines sampled the Pahaquarry mine for approximately one month (March 9 to April 8, 1993) utilizing alpha track radon detectors, which measure the average concentration of radon gas in picoCuries per liter (pCi/l) of air. The primary concern is from radon progeny and not radon gas, therefore estimated radon progeny concentrations must be extrapolated from the radon gas measurements. Ideally, it would be helpful to measure the mine air for radon progeny, however, the sampling protocols require expensive sampling instrumentation and on-site trained personnel. Alpha track devices are passive, inexpensive and can be placed in the mine unattended for up to one year. The alpha track samplers are excellent screening devices for ascertaining if a radon exposure problem exists.

The units used to measure radon progeny and calculate employee exposure is the working level (WL). One (1.0) working level is defined as an atmospheric concentration of Rn^{222} progeny which will deliver 1.3 X 10^5 million electron volts of alpha energy per liter of air in decaying through Polonium-214. The general rule of thumb is that 100 pCi/l of radon gas will produce a radon progeny concentration of approximately 0.50 WL.

The BOM report indicates the 6 alpha track measurements in the lower shaft averaged 87.9 pCi/l (0.44 WL). The maximum concentration in the lower shaft was 189.2 pCi/l (0.95 WL) and the minimum concentration was 21.6 pCi/l (0.11 WL). The estimated exposure time in the lower shaft was given to be a maximum of 20 minutes two times per week from mid-June to Labor Day (12 weeks). The estimated exposure for this time period would be:

40 minutes per week X 12 weeks = 480 minutes/60 = 8 hours

$$\frac{8 \text{ hours X } 0.44 \text{ WL}}{173 \text{ hours/month}} = 0.020 \text{ Working Level Months per employee per year based on estimated exposure times}$$

There were 4 alpha track measurements made in the upper shaft with an average of 4.6 pCi/l (0.023 WL). The maximum concentration measured in the upper shaft was 5.0 pCi/l (0.03 WL) and the minimum concentration was 3.7 pCi/l (0.02 WL). An estimated maximum 10 minute exposure for the same time period (mid-June to Labor Day) in the upper shaft would result in an exposure of only 0.001 WLM.

The cumulative exposure from mid-June to Labor Day would be approximately 0.021 WLM, which is only 0.5% of the 4 WLM occupational exposure standard. However, the MSHA standards and NPS-14 guideline say that when the average radon progeny concentration exceeds 0.30 WL management should monitor weekly and keep exposure records on all employees working underground.

The greatest concern about the data is the period of collection. Data collected from March 9 to April 8, is not representative of employee exposures from mid-June through Labor Day. Radon and radon progeny concentrations can vary greatly from spring to summer. Radon measurements should be made during the exposure period (mid-June to Labor Day) to estimate exposures levels.

Based on the available radon data and exposure time estimates there should be no problems in keeping employees below the current exposure standard of 4 WLM or even 3 WLM. The following recommendations would serve to verify this premise:

Recommendations:

1. Utilizing alpha track radon devices measure the average radon concentration in the lower and upper shaft during periods of employee use, i.e. mid-June to Labor Day. Perform both long-term (mid-June to Labor Day) and short-term (monthly) samples to characterize the exposure period.

2. Maintain a logbook, for future exposure calculations, on all employee time spent in the mine. The logbook should denote employee name, date, and time entering and leaving the mine. The logbook should break down time spent in the lower shaft and upper shaft.

3. Evaluate the radon sampling data from mid-June to Labor Day to determine future management actions.

If you have any questions concerning this information please contact me at 303-969-2072.

cc:
Dennis Dolinar, U.S. Bureau of Mines
Claudia Finney, NPS Division of Engineering and Safety Services
John Burghardt, NPS Mining and Minerals Branch

STABILIZATION PLAN

AT

PAHAQUARRY COPPER MINES, DELAWARE WATER GAP NATIONAL RECREATION AREA

Prepared by

The U.S. Bureau of Mines

under

Intra-Agency Agreement
No. 2150-3-0100

with

The National Park Service

Submitted:

August 1994

TABLE OF CONTENTS

	Page
LIST OF FIGURES	iv
LIST OF TABLES	iv
EXECUTIVE SUMMARY	v
INTRODUCTION AND BACKGROUND	1
GEOLOGICAL SETTING	1
FIELD INVESTIGATION	2
TESTING	3
Water Quality Analysis	3
Background	3
Results	4
Conclusions	6
Air Quality Testing	8
Monitoring of Radon Gas	8
Monitoring of Other Gases	10
MINE STABILIZATION	10
Mine Tunnel No. 1	10
Existing Roof and Sidewall Conditions - Mine Tunnel No. 1	10
Roof and Sidewall Control Alternatives - Mine Tunnel No. 1	12
Roof Stabilization - Mine Tunnel No. 1	13
Sidewall Stabilization - Mine Tunnel No. 1	15
Floor Remediation - Mine Tunnel No. 1	16
Mine Tunnel No. 2	16
Existing Roof and Sidewall Conditions - Mine Tunnel No. 2	16
Roof and Sidewall Control Alternatives - Mine Tunnel No. 2	17
Roof Stabilization - Mine Tunnel No. 2	17
Floor Remediation - Mine Tunnel No. 2	19
PORTAL SYSTEMS	19
Mine Tunnel No. 1	19
Portal Design: Option #1, Reinforced Concrete	19
Portal Design: Option #2, Alloy Steel Space Cloth	21
Mine Tunnel No. 2	21
Portal Design: Option #1, Reinforced Concrete	21
Portal Design: Option #2, Rectangular Tubing	24
Portal Design: Option #3, Steel Arches	24
Decline Shaft No. 2	24
Security Systems	27
DRAINAGE SYSTEMS	27
Mine Tunnel No. 1	27
Mine Tunnel No. 2	31
Walkways	31

Page

PERIODIC EXAMINATION OF TUNNELS AND PORTALS 32
COST ESTIMATES 33
Tunnel Stabilization - Mine Tunnel No. 1 33
Scaling 33
Roof Bolting 33
Steel Sets 34
Removal of Material - Mine Tunnel No. 1 34
Wheelbarrow 34
All Terrain Vehicle 35
Helicopter 35
In-Mine Stowing - Mine Tunnel No. 1 35
Tunnel Stabilization - Mine Tunnel No. 2 36
Scaling 36
No Reinforcement 36
Roof Bolting 36
Removal of Material - Mine Tunnel No. 2 36
Removal of Material from Mill Site 37
Portal System - Mine Tunnel No. 1 37
Portal System - Mine Tunnel No. 2 37
Decline Shaft No. 2 38
Drainage Mine Tunnel No. 2 - Portal Area 38
Tunnel Inspection 38
MAINTENANCE AND SAFETY GUIDELINES 39
Background 39
State Requirements 39
County Requirements 39
Township Requirements 39
American Disabilities Act (ADA) Requirements 39
Federal Requirements 40
Construction Phase 40
Personal Protection 40
First-Aid Training 40
Provisions and Maintenance of Self-Rescue Devices 41
Emergency Communications System 41
Machinery and Equipment 41
Miscellaneous 41
Safety Programs 42
Firefighting Procedures 43
Escape Routes 44
Check-In, Check-Out System 44
Ventilation 44
Tours Phase 44

Page

Public Safety Guidelines 44
Maintenance Safety Guidelines 46
Additional Guidelines 47
CONCLUSIONS 47
BIBLIOGRAPHY 49
APPENDIX A - REVIEW TEAM ORGANIZATION 50
APPENDIX B - INDIVIDUAL CONTACT LIST 51
APPENDIX C - COST INFORMATION 52
APPENDIX D - DESCRIPTIVE PHOTOGRAPHS 53
APPENDIX E - ROOF BOLT AND RESIN SPECIFICATIONS 67

LIST OF FIGURES

		Page
FIGURE 1.	Location of Mine Tunnels No. 1 and No. 2 and Decline Shaft No. 2.	2
FIGURE 2.	Mine Tunnel No. 1.	3
FIGURE 3.	Mine Tunnel No. 2.	3
FIGURE 4.	Radon detector locations in Mine Tunnel No. 1.	8
FIGURE 5.	Radon detector locations in Mine Tunnel No. 2.	8
FIGURE 6.	Plan view of the layer boundaries in Mine Tunnel No. 1.	10
FIGURE 7.	Cross section A-A.	11
FIGURE 8.	Cross section B-B.	11
FIGURE 9.	Cross section C-C.	11
FIGURE 10.	Recommended roof bolt pattern for Mine Tunnel No. 1, side view, looking into the portal	14
FIGURE 11.	Recommended roof bolt pattern for Mine Tunnel No. 1, plan view, looking onto top of the mine tunnel	14
FIGURE 12.	Mine Tunnel No. 1 portal design: option #1, reinforced concrete	20
FIGURE 13.	Mine Tunnel No. 1 portal design: option #2, space cloth.	22
FIGURE 14.	Mine Tunnel No. 2 portal design: option #1, reinforced concrete	23
FIGURE 15.	Mine Tunnel No. 2 portal design: option #2, rectangular tubing	25
FIGURE 16.	Mine Tunnel No. 2 portal design: option #3, steel arches	26
FIGURE 17.	Decline Shaft No. 2 closure design.	28
FIGURE 18.	Fabrication details for Decline Shaft No. 2	29
FIGURE 19.	Security systems for the portal and decline shaft.	30
FIGURE 20.	Walkway design for Mine Tunnel No. 1.	32

LIST OF TABLES

TABLE 1.	Results from the Chemical Analysis of Host Rock Samples	6
TABLE 2.	Results from the Pahaquarry Mines Water Sample Analysis	7
TABLE 3.	Radon Monitoring Results	9
TABLE A-1.	Pahaquarry Copper Mines Review Team	50
TABLE A-2.	Contact List	51

EXECUTIVE SUMMARY

The National Park Service (NPS) requested the U.S. Bureau of Mines (USBM) to provide technical assistance via an Interagency Agreement No. 2150-3-0100. The NPS requested that the USBM investigate the stability of Decline Shaft No. 2 and Mine Tunnels No. 1 and No. 2, design portal design options for Mine Tunnels No. 1 and No. 2, provide maintenance and safety recommendations, submit a report of the findings and provide technical assistance for closing the decline shaft and stabilizing both mine tunnels. The NPS also requested that the USBM provide an estimate of the construction cost associated with the project. In response to this request, the USBM assembled an interdisciplinary team of experienced personnel to undertake the review.

The Pahaquarry Copper Mines, located in the Delaware Water Gap National Recreation Area in New Jersey, are inactive mines that the National Park Service desires to open to the public for interpretative tours. The old workings examined included the Mine Tunnels No. 1 and No. 2 and the Decline Shaft No. 2. The NPS requested the USBM to investigate the stability of the abandoned workings and submit a report of the findings.

The incorporation of stabilization alternatives will result in various degrees of safety. In general, the more remedial work initially performed will have the highest visual impact on the cultural resource but require the least amount of maintenance. Because of the geology, inflow of water, and in situ stresses it should be noted that underground openings can never be made 100 percent safe. Continued monitoring and maintenance will be required to minimize the risks.

The NPS also requested alternative methods for closing the Mine Tunnel No. 1 and No. 2 portals and the Decline Shaft No. 2. Alternatives are presented that describe the method, use applications, technical illustrations, and technical support information. The closure methods allow for construction that can provide access to the mine. However, providing access makes the closure susceptible to vandalism and unauthorized access. Most closure methods require periodic monitoring for deterioration or corrosion of construction materials.

INTRODUCTION AND BACKGROUND

Near the Delaware Water Gap, where the Delaware River cuts through a long mountain ridge composed of uniformly and steeply tilted sandstones, there is a copper deposit, which had been worked 200 or more years ago. This property, known as the Pahaquarry copper mine, is about 8 miles from the town of Water Gap and 10 miles from Stroudsburg, Pa, at a point known as Dimicks Ferry.

The early workings were extensive, comprised of a tunnel driven for a distance of 100 ft, with a crosscut at the end. The property was reopened in 1847 and 1861, but the ore was low grade and work was soon stopped. About 1901 another attempt was made to work the property.

The National Park Service (NPS) requested the U.S. Bureau of Mines (USBM) to provide technical assistance via an Interagency Agreement. The NPS requested that the USBM investigate the stability of Decline Shaft No. 2 and Mine Tunnels No. 1 and No. 2, submit a report of the findings, and provide technical assistance for closing the decline shaft and stabilizing both mine tunnels. In response to this request, the USBM assembled an interdisciplinary team of experienced personnel to undertake the review. The team members are listed in Appendix A, Table A-1.

Mine Tunnel No. 1 is approximately 267 feet in length and Mine Tunnel No. 2 is about 100 feet in length. The stabilization of the mine tunnels is being considered in order to increase the safety for visitors who will enter the mines and to preserve the mines as a cultural resource for the park. The access to Decline Shaft No. 2, which is to be closed, is approximately 10 ft wide and 7 ft high, with a 30-ft slope distance dipping at 45°. The approximate locations of Mine Tunnels No. 1 and No. 2 and the Decline Shaft No. 2 are shown in figure 1.

GEOLOGICAL SETTING

The ore-bearing beds occur in the red and gray sandstones of the High Falls Formation, of upper Silurian Age, which forms the second or northern ridge on the slopes of the Kittatinny Mountain. The formation was formerly classified by the New Jersey geologists as Medina Sandstone, but has recently been determined to be of Salinian Age. It has an estimated thickness of 800 feet and consists of massive sandstones and interbedded shales. The strike is N 20° W; the dip is 40° to 45° W, as observed in the Pahaquarry copper mines. The shaley member shows cleavage that dips at steep angles to the southeast, and are slatey, as seen in the copper mines. The harder, course-grained rocks show no cleavage planes seen in the more shaley beds that were formed at the same time. The prevailing colors of the High Falls Formation are red and brownish red, but grayish green rocks appear in places. At the Pahaquarry mines the rocks are locally gray. The top of the formation is nearly all red shale, split by cleavage, and carrying interbedded red and gray sandstones. The shale occurs in thin beds and the sandstones in thick beds (*3*).

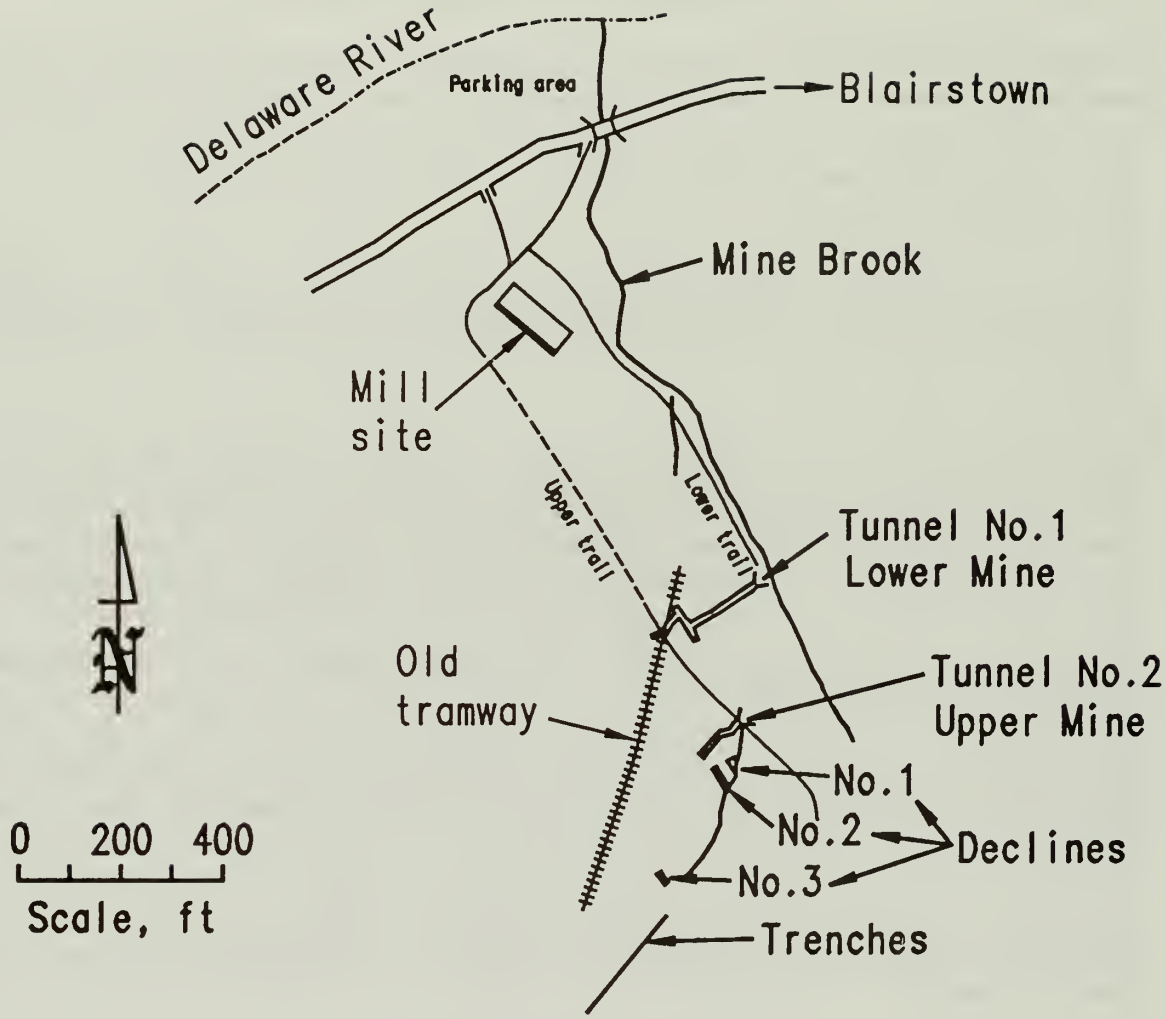

Figure 1. The location of Mine Tunnels No. 1 and No. 2 and Decline Shaft No. 2.

FIELD INVESTIGATION

The field investigation was conducted on March 8-9, 1993. The area had recently experienced a spring snowfall, and much of the ground was covered, limiting visual observation of the decline shafts. Both Mine Tunnels No. 1 and No. 2 were mapped for fractures and joints, and the portal areas were examined for stability. The drainage on the surface and underground was examined, and estimates were made on volume and weights of fallen material. Water samples were taken for laboratory analysis from both mines. The air was sampled for percentages of oxygen and methane, and carbon monoxide was recorded in parts per million using a CMX 270 air monitoring device. Radon gas detectors were hung from the roof of Mine Tunnels No. 1 and No. 2 and were retrieved by NPS personnel and forwarded to the USBM for analysis after 30 days.

During the field investigation, the USBM filmed both mine tunnels and portal areas. Additionally, still pictures of the area are included in the Appendix D of the report to increase the readers' understanding of the rock structure and condition at the site. The approximate dimensions and configurations of Mine Tunnels No. 1 and No. 2 are shown in figures 2 and 3.

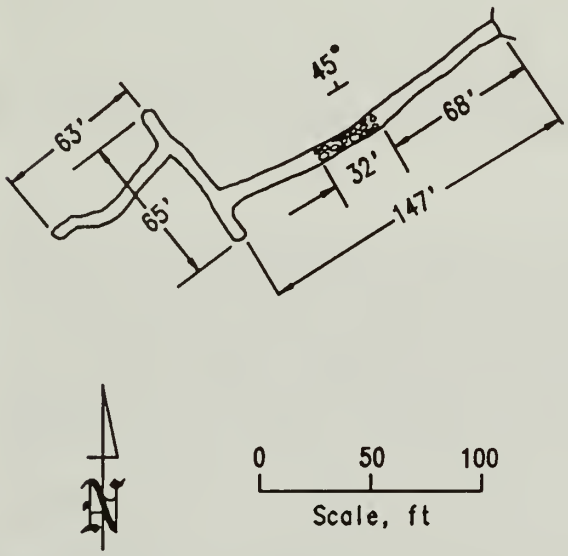

Figure 2. Mine Tunnel No. 1.

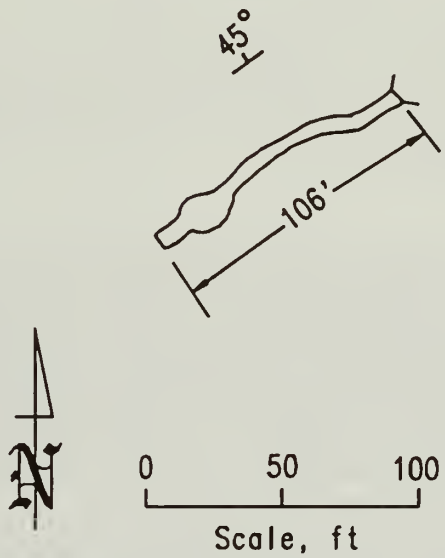

Figure 3. Mine Tunnel No. 2

TESTING

Water Quality Analysis

Background

The passage of the Federal Water Pollution Control Act Amendments in 1972 compelled States to assess nonpoint-source pollution resulting from land-use activities and to develop watershed management practices to minimize this pollution. The Clean Water Act of 1987 directs States to further define nonpoint-source pollution and to identify cumulative effects from multiple land-use activities (*1*). Nonpoint-sources are diffuse in nature and are not regulated through the permit program of the Clean Water Act. Such activities include agriculture, forestry, construction, and abandoned and/or inactive mines. The primary pollutants normally associated with these activities are sediment, salinity, heavy metals, nutrients (phosphorus and nitrogen), and bacteria (*2*).

Mining activities historically have had a detrimental impact on the water quality of the local drainage basin. Mine workings expose mineralized veins to the atmosphere where the action of the air and water oxidize sulfides and create acidic mine drainage. The acidic solutions are

capable of leaching metals from the surrounding mineralized host rock. The acidic metal-laden waters eventually travel from the immediate mine location and enter local surface and ground water systems causing a degradation of quality in these water resources and affecting human, plant, and animal life.

The Pahaquarry Mine, because of the nature of ore deposition, contains no mineralized veins. The origin of ore deposition appears to be sedimentary, involving the deposition of detrital chalcocite (Cu_2S) grains within a sandstone unit. The minable deposits occurred as nodules and small grains of chalcocite, concentrated within small lenses or beds, and chalcocite grains disseminated within the Medina Sandstone member of the Upper Silurian High Falls Formation (*3*).

The areas of high concentration of the ore mineral that would potentially cause water quality problems appear to have been removed by mining. The ore-bearing sandstone is dense and not readily permeable, limiting the percolation of surface water that might leach out any disseminated ore remaining in the sandstone. The vertical joint planes could serve as pathways for water to flow through the unit and leach out any residual sulfides (*3*). Analysis of rock components revealed that the concentration of copper and sulfur in the rock is low. Table 1 contains the results of chemical analyses conducted on host rock samples. (Concentrations are expressed in percentages and in parts per million, for comparison with the units of the water quality analyses results.) The results indicate that of the component analytes, iron would be the most likely constituent to contribute to water quality degradation (*4*). Iron did not, however, appear to be present in high concentration in the mine water.

Samples of water were collected from standing ponds within the upper and lower workings of the Pahaquarry Mine. The samples were analyzed for constituents that would, if present in high concentrations, degrade the quality of the local surface water system receiving pond drainage. The results of water quality analysis are included in Table 2.

Results

pH

The pH of pure water at 25 °C is 7.00. The pH of most U.S. ground water falls within the range of 6.0 to 8.5. River water in the United States not affected by pollution generally has a pH range of 6.5 to 8.5 (*5*). The Pahaquarry water samples fall within the range of natural surface and ground water.

Conductivity

Conductivity is a measure of the ability of water to conduct an electrical current and is a convenient and rapid method to estimate the quantity of dissolved solids in the water (*1*). Conductivity values are affected by the presence of chloride and metals dissolved in the water. The conductivity of pure water is 0.05 μmho/cm. Distilled water has a conductivity

of 1.0 μmho/cm, while the conductivity of seawater is 50,000 μmho/cm. For surface and ground water, 50 μmho/cm is considered low and occurs where precipitation is low and/or rocks are chemically unreactive (*5*). The Pahaquarry Mine water falls into this conductivity range.

Chloride

Chloride is present in all natural water in low concentrations, less than 1 mg/L or 1 ppm. The chloride content of the Pahaquarry water is below this value.

Sulfate

One method by which sulfate is formed is the weathering of sulfide minerals by aerated water. Sulfur is oxidized to yield sulfate ions that are dissolved in the water. Sulfate in rainfall ranges between 1 and 10 mg/L or ppm (*5*). The low sulfate values of the Pahaquarry water suggest that the sulfur content present in the host rock have little affect on the sulfate concentrations of the water, because the values are only slightly higher than that of rainwater.

Alkalinity

Alkalinity of water is the capacity to neutralize acid. Alkalinity of natural water is contributed by the bicarbonate, carbonate, and hydroxide species and is pH dependent. The property of alkalinity is determined by titration with a strong acid. The end point of the titration is the pH at which virtually all solutes contributing to alkalinity have reacted. Alkalinity is expressed in equivalency of calcium carbonate ($CaCO_3$). Most natural waters have an alkalinity in the range of milliequivalents per liter range (*1, 5*). The Pahaquarry Mine water falls within this range.

Calcium and Magnesium

The concentrations of calcium (Ca) and magnesium (Mg) together are considered the measure of water hardness.

Calcium is the most abundant alkaline-earth metal and is a major constituent of many common rock-forming minerals. As a result, calcium is the predominant cation in naturally occurring waters. The average concentration of calcium in river water ranges from 13.4 to 15 mg/L or ppm (*5*). Most waters associated with granite or siliceous sandstones contain less than 10 mg/L or ppm calcium (*1*). The concentration of calcium in the Pahaquarry water is below river water range, but slightly above that of water associated with siliceous sandstone.

Magnesium in soft water ranges between 1 and 2 mg/L or ppm, whereas waters associated with rock composed of magnesium-bearing minerals may contain 20 mg/L magnesium (*1*). The magnesium concentration in the Pahaquarry water is above the value for soft water, but is not a threat to water quality.

Sodium and Potassium

Sodium (Na) and potassium (K) are members of the alkali-metal group of the Periodic table. In dilute natural waters the sum of the concentrations of these two elements are usually less than 10 mg/L. The concentrations of sodium and potassium in Pahaquarry water fall within this range.

Metals

Metal concentrations in water can affect the health of aquatic flora and fauna. The list of metals that were analyzed in the Pahaquarry water samples are included in Table 2. All of the metal concentrations are below the detection capabilities of the analytical equipment used. There may be risk that some of the metals occur in concentrations high enough to pose a threat to aquatic life. To determine if such is the case, costly analyses using laboratory methods that can detect much lower concentrations of a given metal would have to be performed. Given the relatively small volume of water present in the Pahaquarry Mine, these results are adequate to assure that there are no very large concentrations of any one of the metals analyzed that might pose a threat to aquatic life if the water were to be discharged to the local surface water system.

Conclusions

The results from the water quality analysis of samples collected from ponds within the Pahaquarry Mine indicate that the water is similar in composition to naturally occurring, unpolluted waters. There appears to be no significant elevation of metal concentration or reduction in pH in the mine water resulting from contact with mineralized zones.

Table 1. Results from the Chemical Analysis of Host Rock Samples

Analyte	Concentration, %	Concentration, ppm
Copper	0.11 - 0.38	1,100 - 3,800
Sulfur	0.04 - 0.06	400 - 600
Iron	2.64 - 2.65	26,400 - 26,500
Calcium Oxice	0.78	7,800
Magnesium Oxide	2.11	21,100

Table 2. Results from the Pahaquarry Water Sample Analysis

	Blank	Mine Tunnel No. 1	Mine Tunnel No. 2
pH	6.3	6.6	6.7
Conductivity, μmho	6.33	49	59
Chloride, ppm	<0.1	0.8	0.8
Sulfate, ppm	<0.5	10.9	11.7
Total suspended solids, ppm	0.003	0.006	0.003
Alkalinity	[1]36	[2]4	[2]42
Ca, ppm	<0.070	11.3	
Mg, ppm	<0.020	4.71	
Na, ppm	<0.002	1.0	
K, ppm	<0.001	0.3	
Metals, ppm:			
Ag	<0.01	<0.01	
Al	<0.365	<0.365	
As	<0.311	<0.311	
B	<0.052	<0.052	
Ba	<0.010	<0.082	
Cd	<0.021	<0.021	
Co	<0.043	<0.043	
Cr	<0.035	<0.035	
Cu	<0.0051	<0.0051	
Fe	<0.022	<0.022	
Mn	<0.023	<0.023	
Mo	<0.061	<0.061	
Ni	<0.243	<0.243	
Pb	<0.254	<0.254	
Th	<0.092	<0.092	
Se	<0.001	<0.001	
V	<0.041	<0.041	
Zn	<0.033	<0.033	

[1]mg $CaCO_3$ equivalent/L at pH 3.3
[2]mg $CaCO_3$ equivalent/L at pH 3.5

Air Quality Testing

Monitoring of Radon Gas

Ten radon gas detectors were set along the roof of Tunnels 1 and 2 for a period of 30 days (3/9/93-4/8/93). As a control, the detectors were placed in pairs with six detectors in Tunnel 1 and four in Tunnel 2. The locations of the detectors are shown on figures 4 and 5.

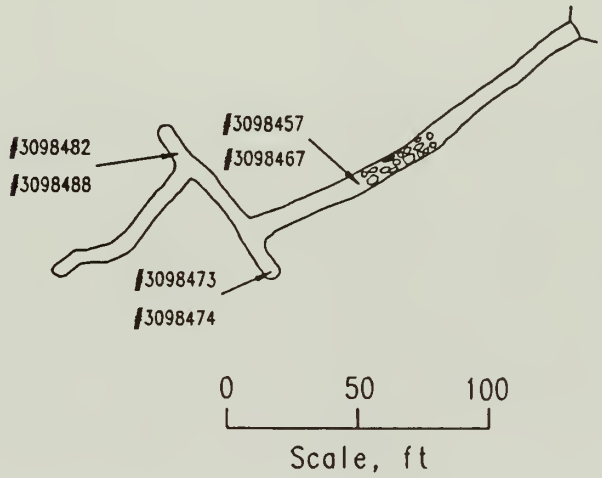

Figure 4. Radon detector locations in Mine Tunnel No. 1.

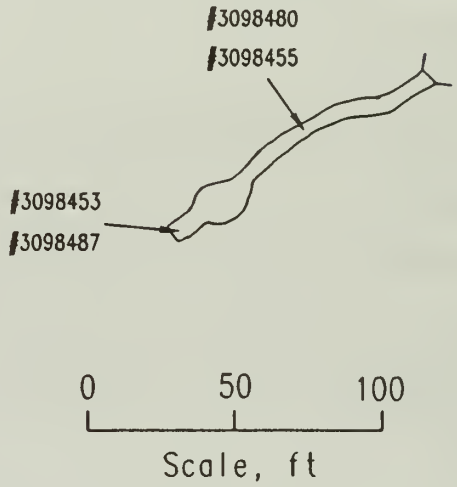

Figure 5. Radon detector locations in Mine Tunnel No. 2.

The test results are given in table 3 with the average radon concentration in picocuries per liter (pCi/L) being the values of interest. The paired detectors in Tunnel 1 give consistent results with the measurements 100 ft from the portal of 189.2 and 174.7 pCi/L, in the crosscut 44.4 and 41.7 pCi/L, and in the crosscut near the back tunnel of 52.8 and 44.7 pCi/L. All the measurements in Tunnel 2 show nearly the identical values with one another. To determine potential exposure to radon daughters (radioactive radon decay products), the average radon gas concentration must be converted to a working level (WL), which is calculated by dividing the average radon gas concentration by 100 then multiplying by a number ranging from 0.2 to 0.8 to provide an estimate of the radon daughter level or WL. In well-ventilated mines the factor can be as low as 0.2; whereas in poorly ventilated mines the factor can be up to 0.8. The tunnels, both with unventilated dead ends, were subject to only natural ventilation during the test period. Because of these existing conditions the tunnels are probably not well ventilated, though the amount of air exchange during the test period is not known. For Tunnel 1, the estimated radon daughter level could range from 0.38 to 1.5 WL for the 189.2 pCi/L measurement and from 0.08 to 0.33 WL for the 41.7 pCi/L measurement. The highest measurements are near the vertical fracture zone where the roof failures have developed. For Tunnel 2, the highest radon gas measurement of 5 pCi/L could result in a radon daughter level of 0.01 to 0.04 WL.

The allowable exposures to radon daughters for workers in metal and nonmetal mines is established by the Mine Safety and Health Administration (MSHA) and are set forth in 30 CFR 57.5037. The radon daughter levels in Tunnel 2 are below statutory limits; the data indicates that the allowable levels are exceeded in Tunnel 1 at the measuring site nearest the portal and may be exceeded at the other two measurement sites, depending on the amount of ventilation. In general, MSHA requires the radon daughter level for workers should be kept below 0.33 WL, with special monitoring or sampling required at 0.1 and 0.33 WL. Workers can be in concentrations greater than 0.33 WL, but more extensive sampling and exposure records are required. The total annual exposure should not exceed 4 Working Level Months (0.33 WL * 12 months). These procedures are required regardless of the length of exposure. Further sampling should be conducted to establish the actual radon daughter levels and how those levels change with time and weather conditions. Sampling should be carried out for the times of the year the facility is expected to be used. For the construction and rehabilitation phase a sampling program also should be established. As an alternative to administrative controls to reduce the radon gas level, engineering control measures such as increased ventilation, sealing the rock, or bleeding the radon through boreholes could be attempted. Increasing the ventilation would ensure a reduction in radon gas but would probably be the most costly. Sealing the rock and creating ventilation boreholes may improve the situation but may prove inadequate to reduce the levels of radon. The fractured rock mass would be very difficult to adequately seal, and this initial process could be costly.

Table 3. Radon Monitoring Results

Detector number	Exposure pCi/L-days[1]	Average radon Concentration, pCi/L
Mine Tunnel No. 1:		
3098457	5674.6	189.2
3098467	5240.8	174.7
3098473	1330.8	44.4
3098474	1251.6	41.7
3098482	1582.7	52.8
3098488	1341.5	44.7
Mine Tunnel No. 2:		
3098453	150.8	5.0
3098455	139.1	4.6
3098480	146.1	4.9
3098487	111.1	3.7

[1]Thirty-day exposure from 3/9/93 to 4/8/93.

Monitoring of Other Gases

The air quality in Mines No. 1 and No. 2 was evaluated using an Industrial Scientific Corporation CMX 270, serial number 9104052-040[1]. Of particular interest was the amount of oxygen (O_2), methane (CH_4), and carbon monoxide (CO). The instrument was calibrated prior to making the measurements. The results indicated there were no air quality problems based on these measurements, agreeing with previous measurements recorded by MSHA. The results of the measurements are as follows:

Oxygen (O_2)	20.7 %
Methane (CH_4)	00.0 %
Carbon Monoxide (CO)	000 ppm

MINE STABILIZATION

The stabilization of many underground excavations requires a combination of natural support. mechanical scaling, and the introduction of mechanical support components. The type of mechanical support can range from roof bolts installed in conjunction with 6-in-square roof plate, to steel trusses used in conjunction with metal screening and lagging, or steel trusses used in conjunction with metal screening or lagging. Scaling and monitoring would still be required to constantly apprise the situation because of the potential of rock movement.

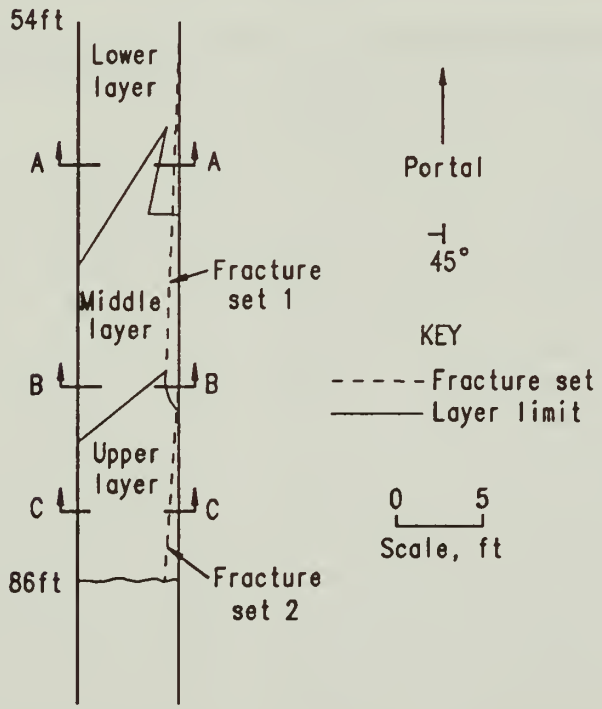

Figure 6. Plan view of the layer boundaries in Mine Tunnel No. 1.

Mine Tunnel No. 1

Existing Roof and Sidewall Conditions - Mine Tunnel No. 1

The roof follows the shale bedding that forms the hanging wall from the portal to a depth of 86 ft (appendix D, photograph 3). The hanging wall is the rock on the upper side of an inclined vein. From 54 ft to 86 ft two vertical fracture sets or similarly oriented breaks in the rock mass, almost parallel to the tunnel, are located in the roof

[1]Reference to specific products does not imply endorsement by the U.S. Bureau of Mines.

near the high sidewall (vertical wall on either side of the tunnel). In this same zone, there are three main layers: a lower, middle, and upper layer exposed by the spalling or failure of the roof (appendix D, photographs 4-8, 10). Figure 6 shows a plan view of the layer boundaries and the two main vertical fracture sets, and figures 7, 8, and 9 show cross sections taken at A-A, B-B, and C-C. The lower layer is 4 to 6 in thick, the middle layer 20 to 24 in thick, and the upper layer 10 to 12 in thick. Each fracture set is a zone 8 to 10 in wide containing four to six vertical fractures. The first fracture set extends from 54 to 74 ft and cuts across the lower and middle layers but does not appear in the exposed section of the upper layer. The second fracture set extends from 74 to 86 ft and cuts across the middle and upper layers but does not penetrate the overlying roof. A small amount of water was dripping from the second fracture set. The upper layer appears to be solid, even near the fracture. For the middle layer, there was loose material along the exposed vertical edge even though the layer was solid near the first fracture set. The immediate hazard is the small block that extends between the two fracture sets on the high side of the tunnel as shown in cross section B-B. For the lower layer, there is a small slab that extends out along the first fracture that may present a hazard, although it was solidly attached to the roof. There are also single fractures that cut across the roof at various angles. One set of fractures cuts across the tunnel at an angle of about 30° toward the portal from the high to low side. The first fracture is at 52 ft and extends about 3 ft across the lower layer. The second fracture, at approximately 60 ft, penetrates the lower layer into the middle layer crossing the entire tunnel width. A third fracture, at about 66 ft, penetrates the lower and middle layers but extends only 3 ft across the tunnel. From 86 to 110 ft the three layers have either fallen naturally or been manually brought down. The roof has stabilized in the overlying sandstone, which appears to be competent. Neither fracture set appears to have penetrated into this sandstone.

From 110 ft to the crosscut, the roof is formed under the shale beds; however, the tunnel is narrower, exposing less of the hanging wall. More rock was left along the

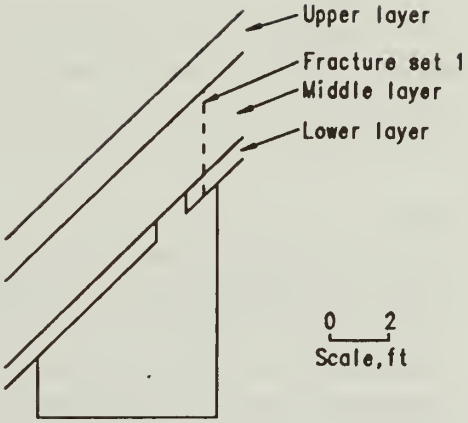

Figure 7. Cross section A-A.

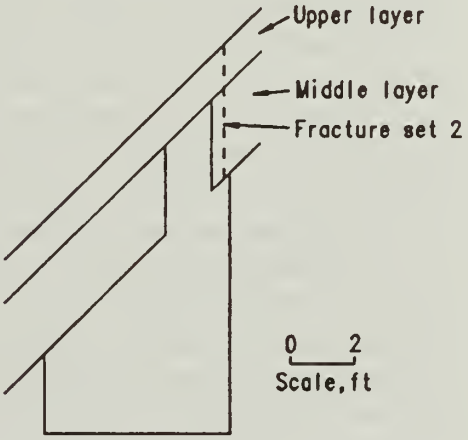

Figure 8. Cross section B-B.

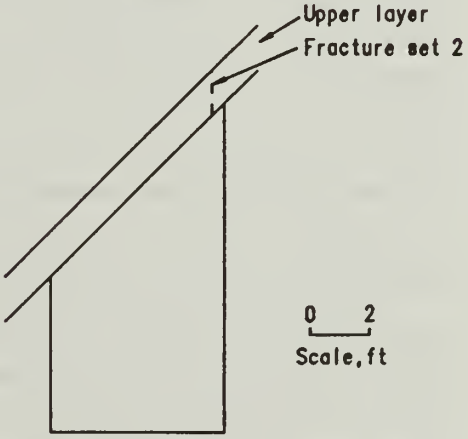

Figure 9. Cross section C-C.

low sidewall, whereas the high sidewall is lower. The roof appears to be competent with only a small amount of material having spalled from the roof and sidewalls, an indication of stability. The roof in the crosscut and the back tunnel also appear stable, with no signs of any major roof problems. A small amount of water was dripping from the roof near the junction of the crosscut and the back tunnel.

Along the high sidewall from the portal to 110 ft there are loose rocks and slabs caused by the opening and the bedded structure especially along the upper portion of the wall. Inby, toward the interior of the mine from 110 ft, less loose material has been formed.

The area that will be most prone to roof failure is the zone containing the two main vertical fracture sets from 54 to 86 ft, a zone where spalling and roof falls apparently have previously occurred. The exact mechanism of failure cannot be determined because there is a lack of sufficient data. However, based on the geologic information gathered, certain conjectures can be developed as to the probable causes or the factors influencing the failures. It can be speculated that the two fracture sets are probably the main factors in the failure of the roof. For the first 50 ft of the lower tunnel the same shale beds have remained stable, as has the last 60 ft of the upper tunnel, where the same layers appear to compose the hanging wall roof. Over a period of time, these fractures loosened and material may have spalled from them. Water could degrade the fractures and the bedding planes between various layers, thus weakening the roof. Bedding planes are division planes that separate individual layers. If the two fracture sets are projected into the failed area, the result would be a fall of ground 1 to 2 ft wide between the fractures. This is similar to the loose block of the middle layer between the two fractures. If such a zone failed and spalled up through the middle layer and back along the fracture system, a cantilevered section would form in the roof. A certain distance of the roof along the fracture would have to be exposed to result in a roof failure. If the lower and middle layers, out to approximately 86 ft, failed in the described roof action, about 20 tons of material would have fallen.

From 54 to 86 ft there is still approximately 50 tons of material in the three layers. The thickness of this roof ranges from about 1 ft, where only the upper layer still exists, to 3 to 3.5 ft, where all three main layers are retained in the immediate roof. However, for the remaining roof section, there is only a small section of the middle layer that is exposed to both fracture sets. Also, before 74 ft, the second fracture set does not intersect the upper layer in the exposed roof. Both of these conditions may indicate that the remaining roof is more stable than the previously failed roof.

Roof and Sidewall Control Alternatives - Mine Tunnel No. 1

There are several methods that can be used to monitor, control, or stabilize the roof and sidewalls. Each method could assist in maintaining safe underground conditions. However, periodic examinations of the roof conditions will still have to be conducted regardless of the method selected. The resource impact on the tunnel will also greatly vary depending on the method chosen to stabilize the roof. The principal area of concern for roof control is from 54

to 86 ft. However, the roof in the rest of the tunnel must still be examined, with scaling being performed to remove any loose material. For stabilization of the sidewalls, the potential problems are from the portal to about a distance of 110 ft along the high sidewall.

Roof Stabilization - Mine Tunnel No. 1

No Reinforcement

The first phase of this option would require the removal of loose or separated pieces of material. This work can be dangerous and should be performed by experienced personnel. If no reinforcement is used there is the potential for small pieces to spall from the roof, as well as a larger roof fall. There is still approximately 50 tons of material in the roof along the described fracture sets. However, the large failures have not been frequent. Records indicate that one failure occurred in the early 1900's and another in 1989 (based on discussions with NPS historian, Berle Clemenson). Conditions may be more stable in the remaining roof. If no reinforcement is used, then it is necessary to determine when or if another large roof fall may occur and to ensure that this does not occur unexpectedly. It may be possible to scale the roof as it weakens, thus preventing any larger roof fall from developing. There are certain procedures that could be adopted to follow such a plan. The first step would be to periodically examine and scale the roof, noting the roof conditions. Additionally, detailed maps or photographic records of the roof area should be kept to provide documented evidence of changes in the roof configuration or deterioration. These could be supplemented by monitoring the roof convergence or displacement between layers with various types of rock mechanics instrumentation. These measurements could provide quantitative data on any changes in the roof conditions. The established data base could then be used to determine if any changes in the stability of the roof are occurring that could lead to potential roof fall.

This method requires experience at examining and scaling the roof, as well as obtaining and interpreting any measurements that might be taken. Instrumentation, if used, would not be visually intrusive. It may require placement on the rocks of temporary anchors or reference points for measurements or the instruments themselves. This method will not increase the stability of the roof unless scaling removes a sufficient amount of material.

Artificial Roof Support

Fully grouted bolts should be used because of the moisture and water conditions. Several types of bolts could be installed including headed or threaded rebar and cables. Figure 10 shows a likely bolting pattern in cross section. One row of roof bolts should be placed close to the vertical fractures and the other near the center of the tunnel. At least 2 feet of the grout column should be anchored into the rock above or beyond the potential failure plane at the top of upper layer (Appendix E). A specific bolt that could be used is a 3/4-in-diam headed rebar made from grade 60 steel (60,000 psi yield strength - Appendix E). If the bolts are placed along the tunnel on 3-ft spacings with the roof being suspended, the following calculations can be made:

Volume of rock - 84 ft^3
Rock density - 150 lb/ft^3
Rock weight - 12,600 lb
Bolt capacity - 26,500 lb
Number of bolts - 2
Bolt system capacity - 53,000 lb

The factor or degree of safety can be approximated using the following relationships and formulas:

Safety factor (SF)
SF = System capacity/rock weight
SF = 53,000 lb/12,600 lb
SF = 4.2

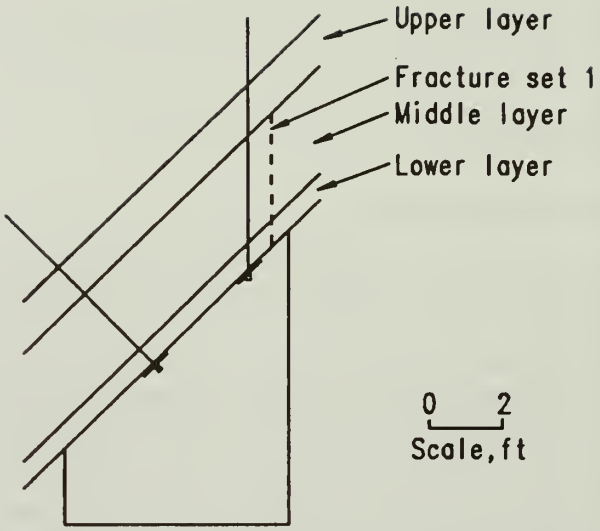

Figure 10. Recommended roof bolt pattern for Mine Tunnel No. 1, side view.

The calculations are based on the assumptions that the rock is of sufficient strength that a 2- ft grout column will exceed the bolt yield strength. Approximately twenty-four 6-ft-long bolts would be grouted into 1-in-diam drill holes with a competent 6 in by 6 in bearing plate. Figure 11 shows a plan view of the bolting pattern for the tunnel from about 54 to 86 ft from the portal. However, the exact roof bolt locations will have to be identified in the field.

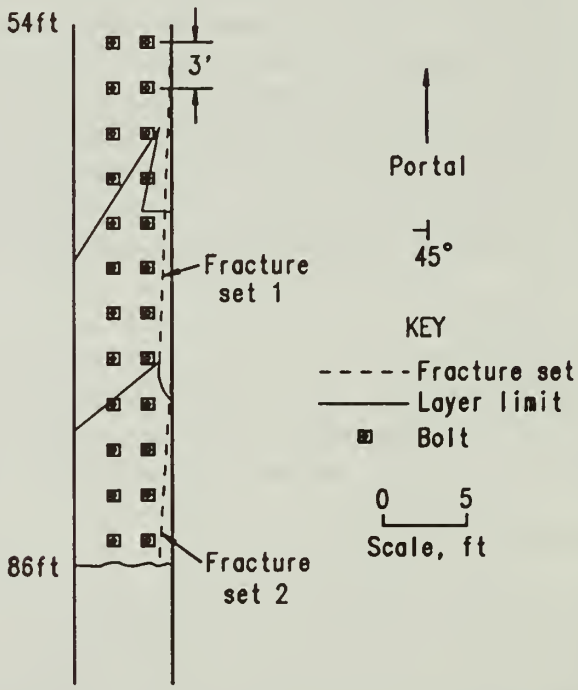

Figure 11. Recommended roof bolt pattern for Mine Tunnel No. 1, plan view.

The bolt system will require no maintenance. However, some loose pieces may develop along the roof between the bolts, along the layer edges, and along the two main fractures. This material will have to be periodically scaled. Wire mesh could be incorporated into the system to prevent the spalling of material but would not increase the stability of the reinforced roof. The mesh would be held tightly against the mine roof with the roof bolts and bearing plates. Spot bolting could be performed between the fractures and the sidewall to minimize roof spalling in this area. This type of reinforcement system, if properly installed, should prevent any large failure of the roof. The visual impact of this system would be the exposure of the bearing plates and the head of the bolts along the roof and the mesh, if used.

An alternative to the placement of roof bolts would be the incorporation of steel sets to support the described roof material. Steel sets are simply I-beam steel members cut and welded to form roof support. A 4-in I-beam, W4 X 13 (AISC 1990), with a minimum flange width of 4-in, would be adequate to support the loads generated by the falling material. Five steel sets would be strategically placed along the entry starting at approximately 50 ft from the portal and spaced at about 10-ft intervals to a distance of about 90 ft. Additionally, metal lagging or steel mesh can be incorporated with the steel sets to limit the fall of small pieces of material. As expected, steel sets would provide a high degree of safety, require very little maintenance, but would have a visual impact on the supported area, especially if used with lagging or steel mesh.

Removal of Material

The three layers could be removed by drilling and blasting using horizontal or vertically drilled holes for a distance of from 54 to 86 ft from the portal. This would require the removal of about 50 tons of material, approximately 1,000 ft^3 using a bulking factor, but would eliminate most of the potentially unstable section of the roof. No reinforcement would be planned for the remaining roof. Although this roof horizon appears to be stable and the fracture sets do not appear to extend into this roof horizon where exposed by the failed layers, there is no guarantee that the same conditions will exist in this roof horizon from the 54 to 86 ft still covered by the shale layers and could not be examined. Additionally, the high sidewall height will be increased by 3 to 3.5 ft for a distance of 32 ft, increasing the potential for additional spalling from this sidewall. Once the roof is mined, periodic examination and scaling would still be required, but the main hazard would be eliminated.

Sidewall Stabilization - Mine Tunnel No. 1

The high sidewall from the portal to about 110 ft is the zone of primary concern for stabilization. The main problem is the spalling of loose material and slabs formed, caused by the daylighting of the bedding, especially along the upper portion of the wall. The wall in this section ranges from 8 to 12 ft high. In general, the high sidewall does not present the same hazard as a large roof fall. The conditions along the high wall could be controlled by scaling, especially if the present loose material and rock are removed during the initial tunnel rehabilitation. The highwall should then be periodically examined and any loose material scaled and removed.

Reinforcement utilizing grouted bolts, in conjunction with wire, chain link, or geosynthetic mesh could be installed to support the sidewall. The support system would be designed to hold or retain any loose material along the wall. If the upper portion of the side wall is supported, a bolting pattern with one bolt near the roof and one located near the center of the wall with a 4- to 6-ft spacing along the tunnel would hold the chain link or mesh in place. If the entire high wall is to be supported, a third bolt would be placed near the bottom with the mesh extended to the floor. The bolts could be 4-ft resin-grouted rebar with 6-in bearing plates. Chain link and geosynthetic mesh would be preferred because they will conform to

the irregular surfaces. The geosynthetic mesh would be least susceptible to water and the easiest to install.

Some spalling does occur along the low sidewall but scaling would be acceptable to control this, as well as, the high sidewall and sidewalls in the rest of the tunnel. Again, these sections would still require periodic examinations and scaling to remove loose material.

Floor Remediation - Mine Tunnel No. 1

Material has accumulated on the floor from the roof and the sidewalls that present a tripping and slipping hazard. From the portal to about 60 ft there are scattered blocks of sandstone that range in size from 0.5 to 1 ft^3 with a total volume of approximately 5 ft^3. From approximately 65 ft to 110 ft there is a large pile of material that covers the floor to a depth of about 3 ft. The estimated material volume is 700 ft^3, weighing approximately 35 tons, with several pieces in the size ranges from 1 ft by 2 ft and 1 ft by 3 ft. The thickness of the pieces range from 6 to 9 in. The material not only creates a tripping hazard, but is very slippery from the dripping water, forming mud from the shale layers. The material would have to be removed before rehabilitation or reinforcement of the roof to allow adequate room to work. From 110 ft to the end of the tunnels there is only a few cubic feet of material that would need to be cleaned up.

Mine Tunnel No. 2

Existing Roof and Sidewall Conditions - Mine Tunnel No. 2

The rock surrounding the portal is blocky and contains open fractures. Because of drainage, the area on the left side of the portal has been partially undermined by erosion (Appendix D, photographs 1 and 2). This created an overhang of rock for a distance of approximately 3 ft beyond the present wood door (Appendix D, photograph 3). Directly above the portal, there is a block of rock weighing about 600 lb that is not well keyed into the surrounding rock structure (Appendix D, photograph 4). This block represents the most apparent hazard in the tunnel. Open fractures are visible along the sides of the block and there is an open vertical fracture behind the block where the wooden door was installed.

Immediately behind the wooden door, there is a block of rock that extends down 2 ft below the surrounding roof (Appendix D, photograph 5). The block is isolated by the vertical fracture, partially hidden by the wood door and an additional vertical fracture located 3 ft deeper into the tunnel. The block is also exposed at the bedding, near the low sidewall. However, the block is well keyed into the high sidewall and firmly attached to the roof. This is the largest exposed block of rock in the tunnel with dimensions of 2 ft by 2 ft by 3 ft. At the present time, this block is more of an inconvenience than a major hazard. The block makes it difficult to get in and out of the door because of the low clearance. There are several other large open vertical fractures that are formed perpendicular to the tunnel in the first 20 ft. These fractures give this section an appearance of being loose. These fractures do

not significantly affect the roof or sidewall stability except for isolating the described blocks near the portal. The roof and high sidewall have a blocky structure caused by the daylighting of the bedding. As a result, some loose slabs can be found along the roof and high sidewall.

From 20 to 40 ft there are no large open vertical fractures. The tunnel roof is stable with very little loose material forming. From 40 to 80 ft the roof follows along a bedding plane in the hanging wall that may be the same shale beds that form the roof in the Mine Tunnel No. 1 (Appendix D, photographs 7 and 8). From 80 ft to the end of the tunnel, the roof is approximately 2 ft lower but still follows the same bedding. The roof is stable under these layers with small amounts of loose material forming along the roof or sidewalls.

From 20 ft to the end of the tunnel only a small amount of material has spalled from the sidewalls and roof (Appendix D, photograph 7). This is an indication of the stability. In the first 20 feet more material has spalled, covering the floor with a few inches of material.

Roof and Sidewall Control Alternatives - Mine Tunnel No. 2

The area of concern is the roof from the portal to an approximate depth of 20 ft. In this section there are blocks of rock that over time could loosen and fall from the roof. The block at the portal, weighing about 600 lb, is the most apparent hazard. The large block hanging from the roof immediately inside the portal and weighing about 1,800 lb is well keyed into the sidewall and roof. Smaller blocks could also be subjected to control methods in this section. As described in Mine Tunnel No. 1, different methods can be used to control the roof and sidewalls, each having various degrees of cultural resource impact. Again, periodic examination of the tunnel conditions will have to be conducted, regardless of the method selected.

Roof Stabilization - Mine Tunnel No. 2

No Reinforcement

Without reinforcement, periodic monitoring, visual examination, and scaling would have to be used to control tunnel conditions. The poorly keyed block at the portal could eventually fall if not reinforced. Although various types of rock mechanics instruments and measurements could measure rock movement and determine crack separation, these measurements may not be very helpful in predicting if and when the block would fall. This is primarily due to the mode or type of failure, the block position, and the small size of the block. It might be possible to remove the block; however, this could lead to a further failure of the surrounding rock structure and leave a large gap above the portal. At present, the block can be examined prior to entering the portal area.

The large block extending down from the roof behind the existing wood door is well keyed into the roof and hanging wall and does not appear to be in danger of falling at this time. Loose slabs along the sidewalls and roof in this tunnel section can be controlled by scaling.

Except for the block at the portal, periodic examination and scaling of the roof and sidewall adequately control the conditions. This method will not change the stability of the roof, but by continuously examining and scaling, the hazards associated with falling material can be reduced or eliminated. For example, it may be adequate to scale at the beginning of every tourist season and monitor roof conditions on a weekly basis.

Artificial Roof Support

A spot bolting system could be used to reinforce the first 20 ft of the tunnel. In spot bolting, specific areas are selected for reinforcement. In this case the location would be based on whether a block of rock could loosen and fall, the size of the block, and the potential for failure. The blocks to be bolted would be determined primarily by a visual inspection. Because of the existing water conditions that may be modified by creating adequate drainage, fully grouted bolts, described for Mine Tunnel No. 1, used in conjunction with an adequate bearing plate, would be recommended.

The primary location for bolting is the poorly keyed block above the portal. Based on the size of the this block only one or two bolts would be required. The second location for bolting could be the block hanging from the roof, just behind the existing wood door. Only one or two bolts would be required with an additional bolt possibly located in the high sidewall, to retain rocks that are keying the main block. In these bolt installations, the recommended anchorage length must be at least 2 ft beyond a potential failure surface. The number and direction of the bolts will depend on the location of failure surface, the location of competent rock in the adjacent structure, and the amount of room required for installation (with a limited clearance under blocks). However, for the block just outside the portal door, a possible bolt location could be the center of the block at a direction of about 30 degrees from vertical towards the up dip side of the tunnel. For the block inside the portal, a bolt could be placed in the center of the block with a direction from vertical to 30° from vertical toward the updip side of the tunnel. Final bolt locations should be identified in the field prior to or during tunnel rehabilitation by a person qualified in ground control and stabilization methods. Considering the two blocks most likely to be reinforced, the bolt capacity will greatly exceed the expected loads. For the remaining tunnel section, individual blocks could also be selected for bolting. However, most of these smaller blocks could be controlled by scaling.

Spot bolting is not designed to increase the overall stability of the tunnel, but is designed to prevent specific blocks of rock from falling from the roof or side wall. The bolt heads and bearing plates will be visible. The total visual impact would be directly related to the number of blocks selected for reinforcement. From a maintenance standpoint, the tunnel would still require examination and scaling prior to the admittance of visitors.

An additional alternative to bolting the portal block would be to wrap a cable around the entire outcrop of rock above the portal. The top of the rock outcrop is approximately 6 to 8 ft above the portal. The cable could be placed where it could run under the poorly keyed

block, essentially tying the material together. This option would have a visual impact and at the same time require routine inspection and maintenance. However, the cable would be above the surface and may pose a tripping hazard for visitors.

A portal design option, presented in the portal systems section, incorporates two steel arch supports with lagging material. This design not only limits access but serves as a structural support member, capable of retaining the described rock material. This option would visually impact the mine portal, but would provide a high degree of safety at the portal area.

Floor Remediation - Mine Tunnel No. 2

When compared to Mine Tunnel No. 1, there is very little spalled material on the floor of Mine Tunnel No. 2. It is estimated that approximately 20 ft^3 of spalled material, most of it occurring in the first 20 ft of the tunnel. However, the material should be placed to one side or removed to minimize the possibilities of tripping hazards and assist with the drainage of any accumulated water. If the material is removed it would make it easier to identify any subsequent roof or sidewall spalls.

PORTAL SYSTEMS

The portal design gates have been designed to permit natural ventilation, allow drainage, and permit the free movement of existing wildlife in and out of the tunnels. Additionally, a closure for the Decline Shaft No. 2 has been designed to permit access by NPS personnel, provide limited viewing, and protect visitors from falling or slipping into the decline. The attached designs are going to have an impact on the visual integrity of the mine tunnels, but will meet the requirements of limiting accessibility to unescorted visitors.

Mine Tunnel No. 1

Portal Design: Option #1, Reinforced Concrete

Option #1 for Mine Tunnel No. 1, shown in figure 12, is designed to prevent unauthorized entry to the mine by using reinforced concrete with Portland cement Type IIIA. This type of cement was chosen due to its ability to obtain high strength in a short period of time. The concrete reinforcement is designed in accordance with American Concrete Institute (ACI) codes. Two #4 reinforcing bars are used in a single layer of reinforcement at a minimum wall thickness of 6 in. When constructing the concrete frame, it should be formed to the existing rock structure to allow the concrete to form and adhere to the rock. Because no loads are expected to be placed on the concrete wall and the bearing capacity of the existing rock has been calculated to be 20% of the ultimate crushing strength of the concrete, the footing is not a major concern. Rock bolts should be installed within the perimeter of the concrete and rock at a minimum depth of 12 in to supply lateral support. Drainage is provided by the use of PVC pipe set in the concrete at ground level.

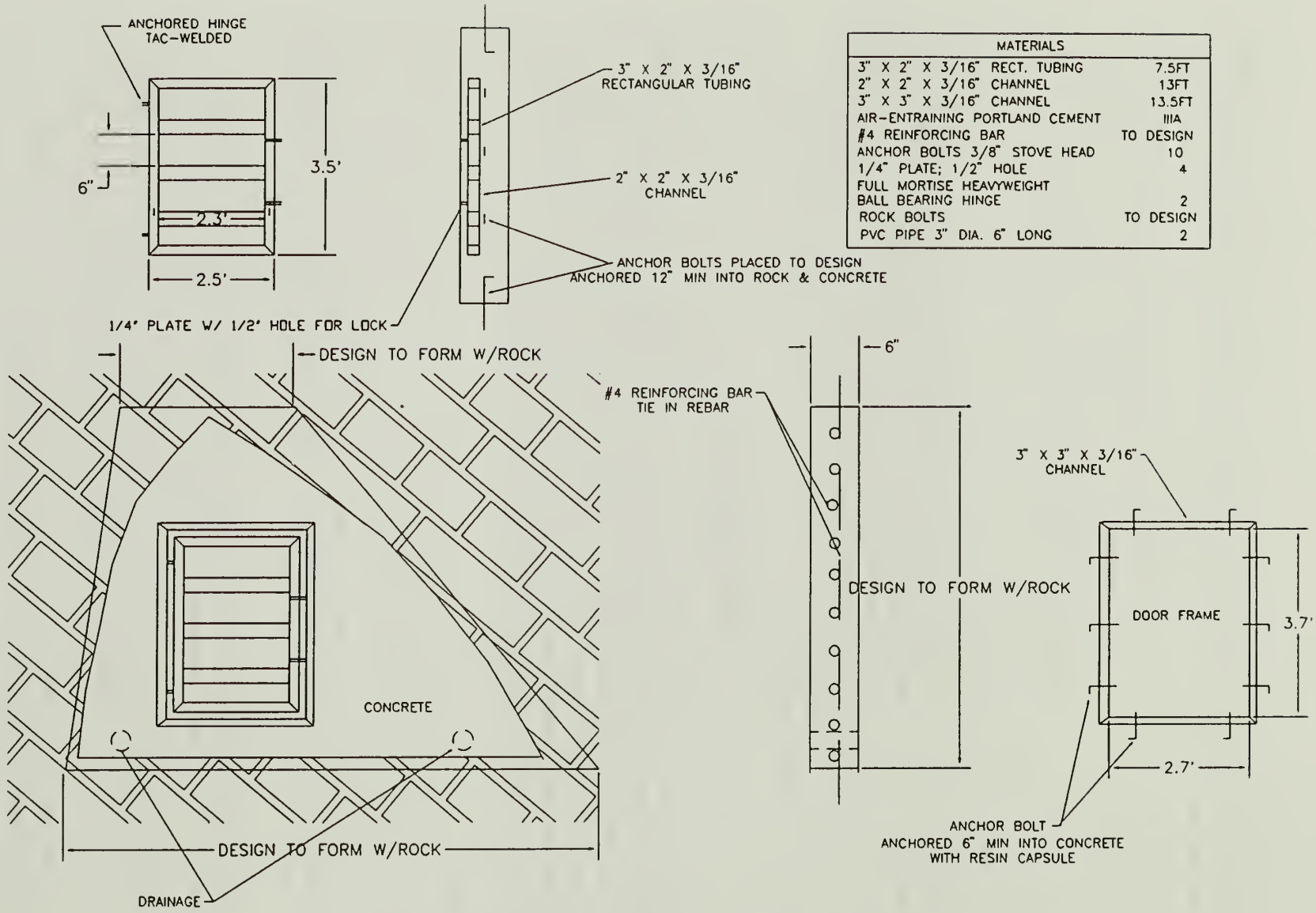

MATERIALS	
3" X 2" X 3/16" RECT. TUBING	7.5FT
2" X 2" X 3/16" CHANNEL	13FT
3" X 3" X 3/16" CHANNEL	13.5FT
AIR-ENTRAINING PORTLAND CEMENT	IIIA
#4 REINFORCING BAR	TO DESIGN
ANCHOR BOLTS 3/8" STOVE HEAD	10
1/4" PLATE; 1/2" HOLE	4
FULL MORTISE HEAVYWEIGHT BALL BEARING HINGE	2
ROCK BOLTS	TO DESIGN
PVC PIPE 3" DIA. 6" LONG	2

Figure 12. Mine Tunnel No.1 Portal Design: Option #1, Reinforced Concrete.

The entrance door to the mine is constructed in accordance to specifications for design standards set by American Institute of Steel Construction (AISC). The support braces in the door are spaced at an interval of 6 in to enhance natural ventilation and permit passage of existing animal life. The recommended hinge support of the door is two Full Mortise Heavyweight Ball Bearing Hinges. They supply durability and strength and require little maintenance. The door frame was designed using channel steel to give protection to the outer concrete edges of the entrance. The materials needed in construction can be referred to on the drawing.

Portal Design: Option #2 , Alloy Steel Space Cloth

Option #2 gate for Mine Tunnel No. 1 uses alloy steel space cloth to close the opening of the mine. The space cloth can be attached to the rock by providing a minimum 6-in lip around the perimeter of the cloth. The space cloth can be selected from a variety of different sizes. Heavier gauges can be used to deter unauthorized entry. The lip is then fastened to the surrounding rock using a 6-in by 6-in plate and rock bolts. The bolts can be anchored with resin or concrete a minimum of 8 in into competent rock. The entrance door support beams are also anchor bolted to the rock. The space cloth is attached to the support beams by welding. The door structure provides 6-in spacing between braces to allow natural ventilation and the passage of existing wildlife. This design provides enhanced ventilation, which may be important to help evaporate water and dilute potential radon gases. The recommended hinge support of the door utilizes the Full Mortise Ball Bearing Hinge. Specifications for this gate design and materials are shown in figure 13.

Mine Tunnel No. 2

Portal Design: Option #1, Reinforced Concrete

The Mine Tunnel No. 2 portal design, option #1, shown in figure 14, is similar to the design proposed for Mine Tunnel No. 1. The design should prevent unauthorized entry to the mine by using a combination of reinforced concrete using Portland cement Type IIIA. The concrete reinforcement is designed in accordance with ACI codes (ACI). Two #4 reinforcing bars are used in a single layer of reinforcement at a minimum wall thickness of 6 in. In constructing the concrete frame, it should be formed to the existing rock structure to allow the concrete to form and adhere to the rock. Because no loads are expected to be placed on the concrete wall and the bearing capacity of the existing rock has been calculated to be 20% of the ultimate crushing strength of the concrete, the footing is not a major concern. Rock bolts should be installed within the perimeter of the concrete and rock at a minimum depth of 12 in on approximately 18-in spacings to supply lateral support. Drainage is provided by the use of PVC pipe set in the concrete at ground level.

The entrance door to the mine is constructed in accordance to specifications for design standards set by AISC. The support braces in the door are spaced at an interval of 6 in to enhance natural ventilation and permit passage of existing animal life. The recommended

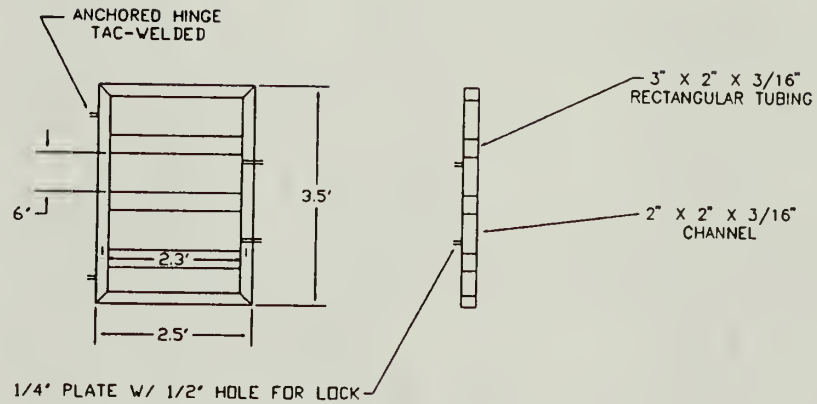

MATERIALS	
3" X 2" X 3/16" RECT. TUBING	TO DESIGN
2" X 2" X 3/16" CHANNEL	13FT
ROCK BOLTS/PLATES 1/4" REBAR	TO DESIGN
1/4" PLATE; 1/2" HOLE	4
FULL MORTISE HEAVYWEIGHT BALL BEARING HINGE	2
ROCK ANCHOR BOLT	16
GRATING	TO DESIGN

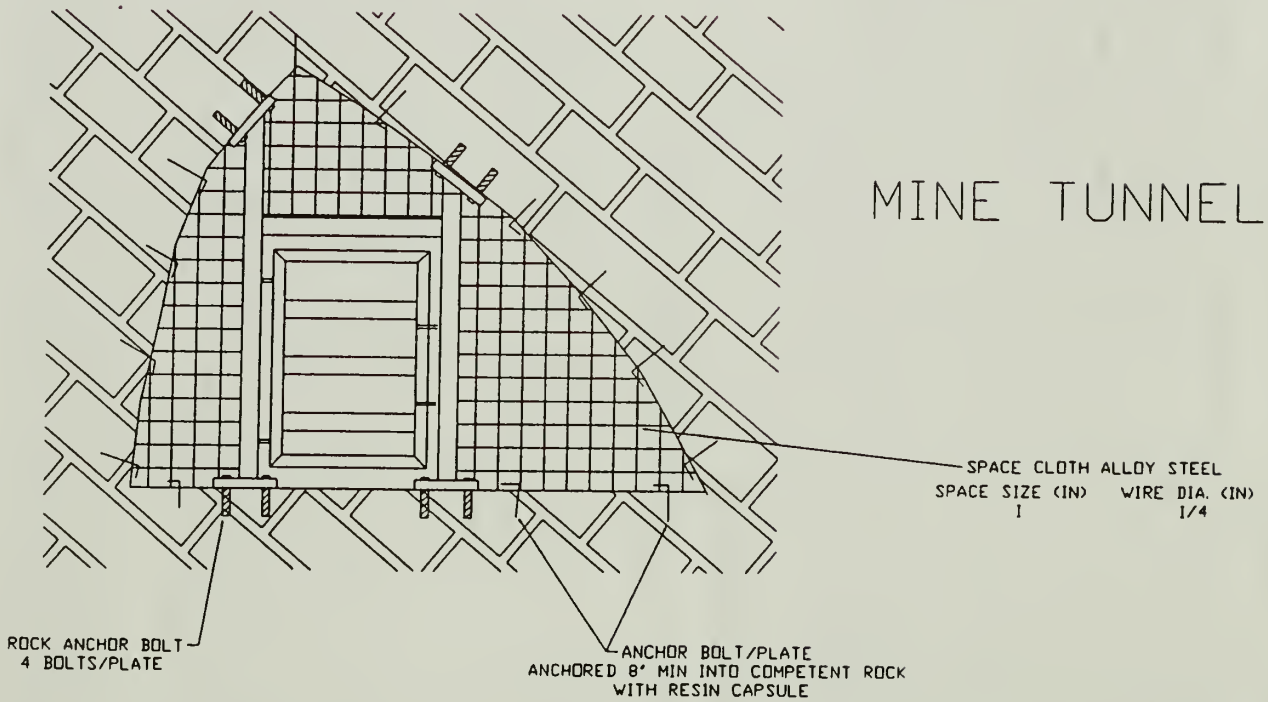

MINE TUNNEL No. 1 PORTAL

NOT TO SCALE

Figure 13. Mine Tunnel No.1 Portal Design: Option #2, Space Cloth.

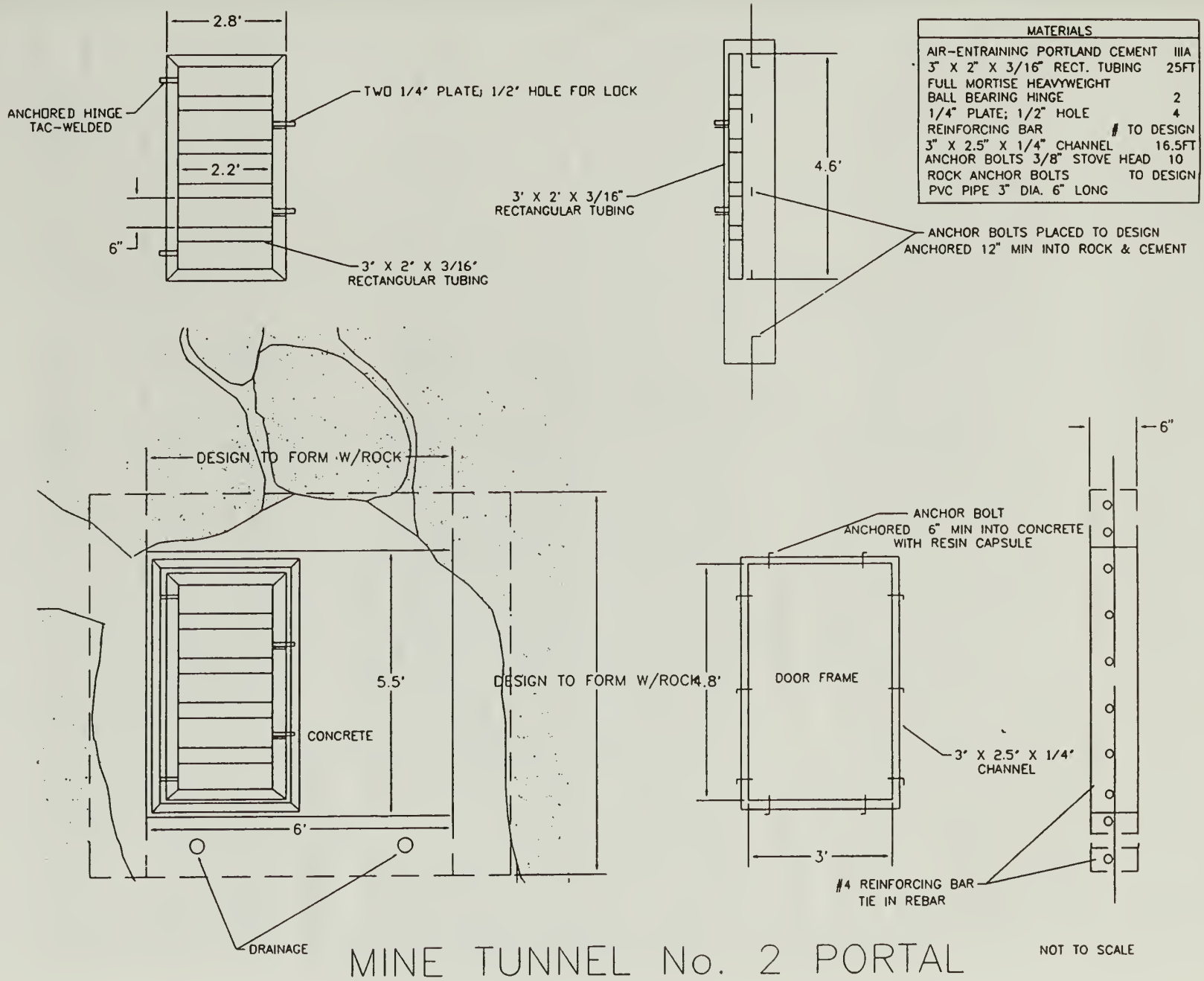

Figure 14. Mine Tunnel No. 2 Portal Design: Option #1, Reinforced Concrete.

hinge support of the door is two Full Mortise Heavyweight Ball Bearing Hinges. They supply durability and strength and require little maintenance. The door frame was designed using channel steel to give protection to the outer concrete edges of the entrance. The materials needed in construction can be referred to on the drawing.

Portal Design: Option #2, Rectangular Tubing

Option #2 for Mine Tunnel No. 2, shown in figure 15, was designed to improve ventilation and allow passage of existing animal life, using a 6-in space between bracing. The steel fabrication of the wall and door comply to specifications set by AISC. In the construction of this structure, the main support beams are resin bolted into a concrete frame within the perimeter of the mine opening, and the lateral braces are welded between them. These bolts should be anchored a minimum depth of 6 in. The concrete beams should be designed to specifications described above. Again, the recommended door support are Full Mortise Heavyweight Ball Bearing Hinges.

Portal Design: Option #3, Steel Arches

The Mine Tunnel No. 2 option gate #3, shown in figure 16, is designed to provide support to the mine entrance by utilizing a steel arch support system. Because of the heavily jointed rock above the mine entrance, it is suggested that concrete be pumped into the joints to help provide rock stability. Injecting polyurethane or expanding foam in an attempt to seal the joints or provide support is not recommended. Water may penetrate the structure and the seal material may prevent the water from draining or evaporating, creating ideal conditions for freeze-thaw stresses, which may cause the material to fail. Concrete will provide support for the material between the steel arches and rock material and also provide a surface for the space cloth to be adequately anchored. After the arches and concrete have been constructed, space cloth is then attached to the structure and rock to provide enhanced ventilation and protection from unauthorized entry. The door is constructed to allow the passage of existing animal life. As shown on figure 15, two arches would be used to provide stability to the portal area. If desired, the gate could be attached on the second steel arch, but the height of the arch may make accessibility difficult.

Decline Shaft No. 2

Decline shaft # 2 is an opening with dimensions of about 7 ft by 10 ft with a depth of about 30 ft that dips down at an angle of 45 degrees. The main danger is the potential for a person to slip and fall into the shaft where the stability of the shaft is not a problem. Two sides of the shaft follow along the bedding with the lower side of the shaft forming a flat area at the opening. The sides of the shaft are smooth along the bedding planes and when wet are very slippery. The surface of the opening is highly irregular with ridges being formed along the sides following the bedding. The upper side that cuts across the bedding has a highly uneven surface with the lower side being flatter and providing access to the shaft. The irregular surface configuration would make it difficult to place the closure structure on the surface. To

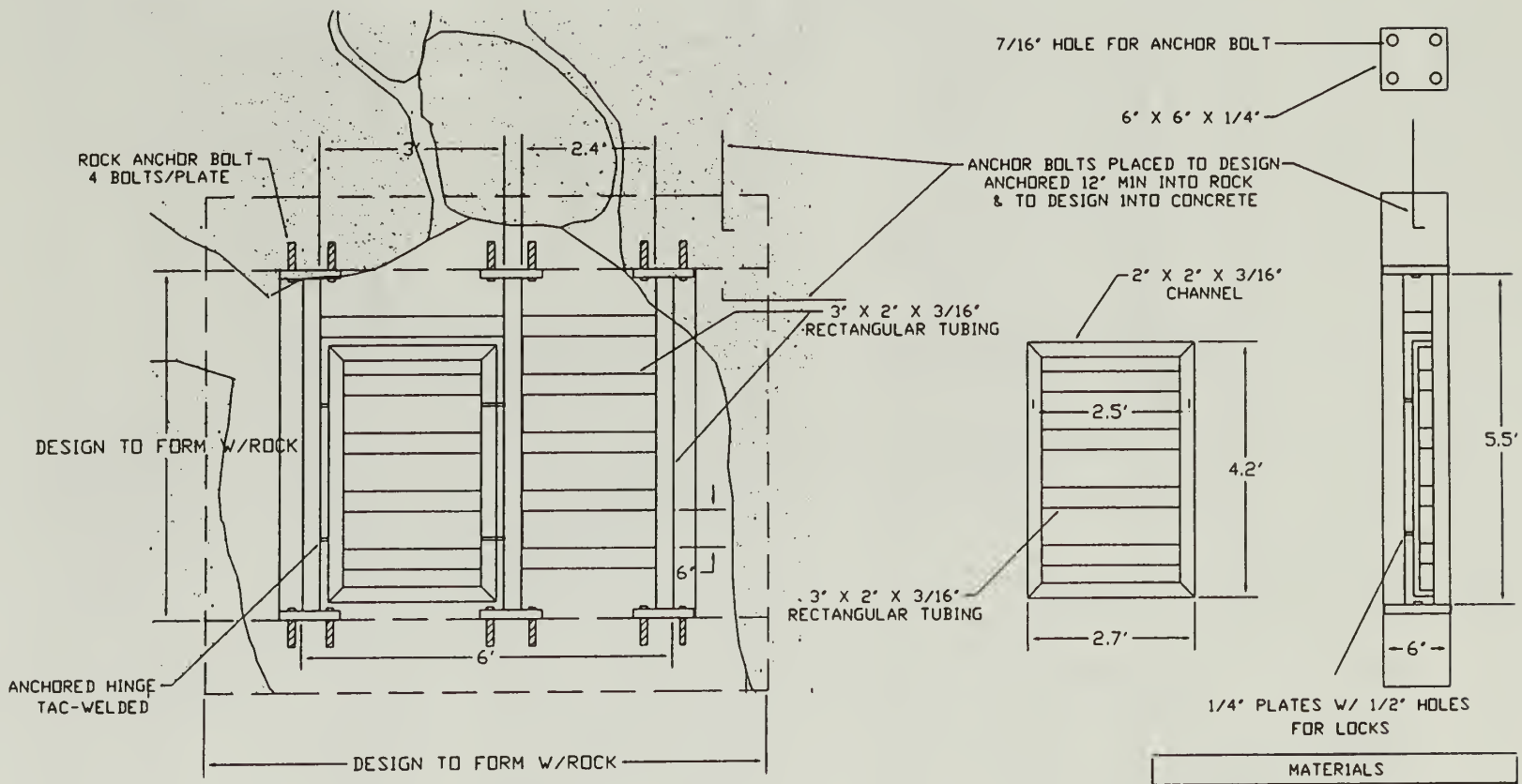

MATERIALS	
3" X 2" X 3/16" RECT. TUBING	43FT
6" X 6" X 1/4" PLATE	6
2" X 2" X 3/16" CHANNEL	15FT
ANCHOR BOLT 3/8" STOVE HEAD	24
AIR-ENTRAINING PORTLAND CEMT.	IIIA
1/4" PLATE; 1/2" HOLE	4
FULL MORTISE HEAVYWEIGHT BALL BEARING HINGE	2
ROCK ANCHOR BOLTS	TO DESIGN

MINE TUNNEL No. 2 PORTAL

Figure 15. Mine Tunnel No.2 Portal Design: Option #2, Rectangular Tubing.

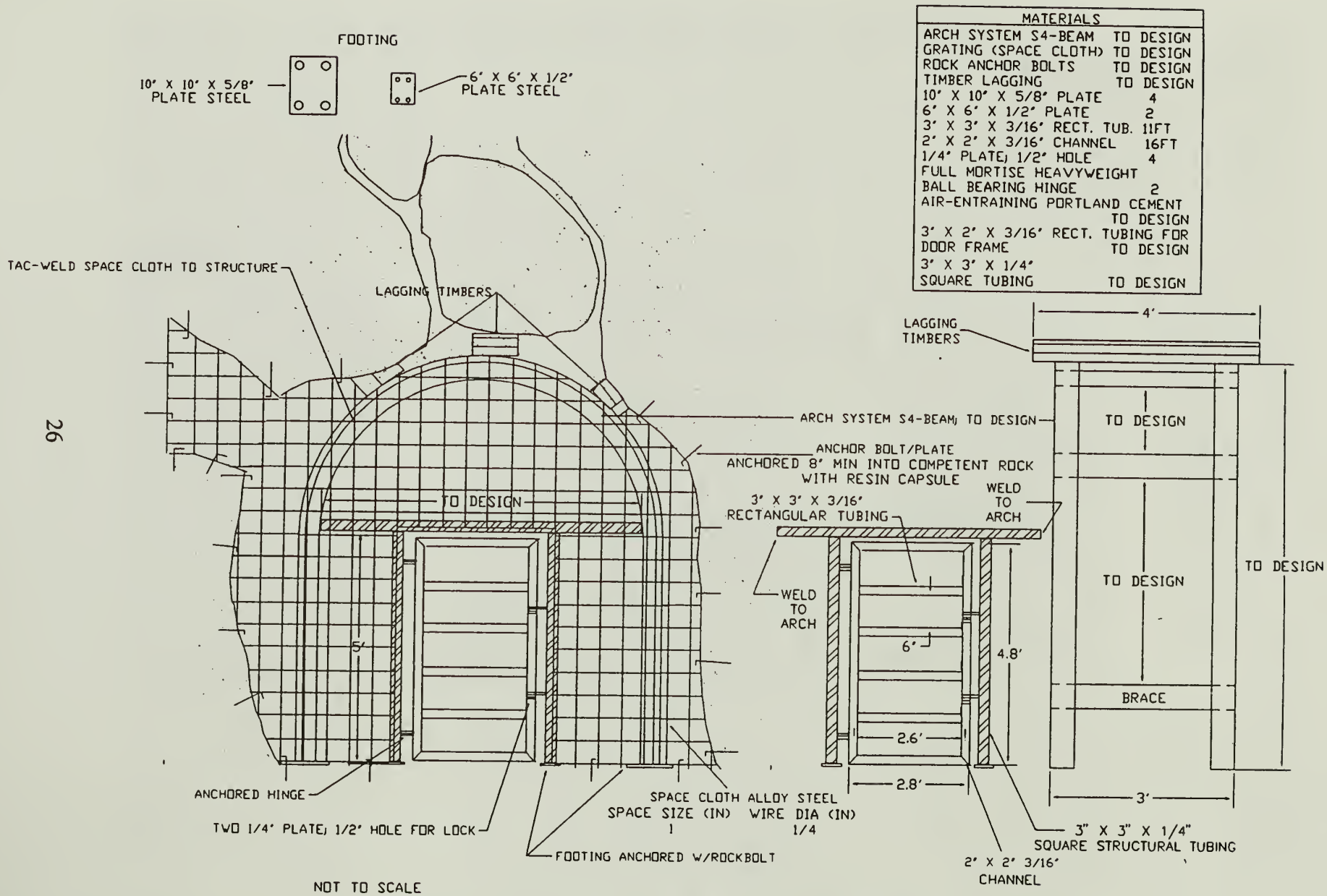

MINE TUNNEL No. 2 PORTAL

Figure 16. Mine Tunnel No.2 Portal Design: Option #3, Steel Arches.

minimize these difficulties the enclosure could be placed partially inside the shaft. Three sides of the enclosure would be inside the shaft which are along the bedding planes and the high side crossing the bedding. The fourth side of the enclosing structure would be outside on the flat section of rock on the lower side of the shaft.

The closing design for Decline Shaft #2 complies with a request by the NPS for an enclosure to be manufactured using rectangular tubing. The gate has a hinge construction to permit easy access by Park personnel to examine and periodically perform maintenance functions inside the decline. An option on the closure is the welding of a 1/4-in-thick plate to the gate frame. This would impact the visibility of the decline but would prevent waste materials from being thrown into the shaft. A generic Decline No. 2 closure design that would have to be fitted and anchored into the shaft, complete with a list of the material requirements, is shown in figures 17 and 18. The exact enclosure dimensions and location within the shaft would have to be determined on site.

A cliff hangs over the shaft on one end. It may be appropriate to construct a fence with a sign to warn visitors of the inherent dangers associated with falling from the cliff to the mine closure. This in itself will not prevent individuals from climbing out onto the decline shaft closure. The integrity of the closure should be able to withstand live loads associated with visitors climbing onto the structure. The design provided can withstand large live loads.

Security Systems

All of the described gates can be locked by fabricating two pieces of 1/4-in plate steel with a 1/2-in hole cut through them. One plate is welded to the door frame and the other plate is attached to the selected door. When the door is closed, the two plates overlap each other, allowing a padlock to be attached. To secure the Decline Shaft No. 2, two 1/2-in-thick steel plates would be fabricated with a 3/4-in slit torch-cut to allow a 1/2-in-diam eye-bolt to freely pass through. The steel plate is then welded to the door, and an eye-bolt is attached to the S-beam. A heavy-duty lock can then be inserted into the eye bolt to discourage and limit access into the decline shaft. Diagrams of the two systems are shown on figure 19.

DRAINAGE SYSTEMS

Both Mine Tunnels No. 1 and No. 2 had standing water present during the field evaluation in the early spring. Additionally, water drainage above the Mine Tunnel No. 2 continues to erode the portal area and should be diverted to enhance stability.

Mine Tunnel No. 1

The Mine Tunnel No. 1, consisting of approximately 270 ft of horizontal workings, showed indications of water throughout. The only pool of water, approximately 30 gallons, occurred behind some fallen material. When the fallen material is removed and the floor is cleaned up, this problem should be eradicated. Although water may be present from surface runoff, it

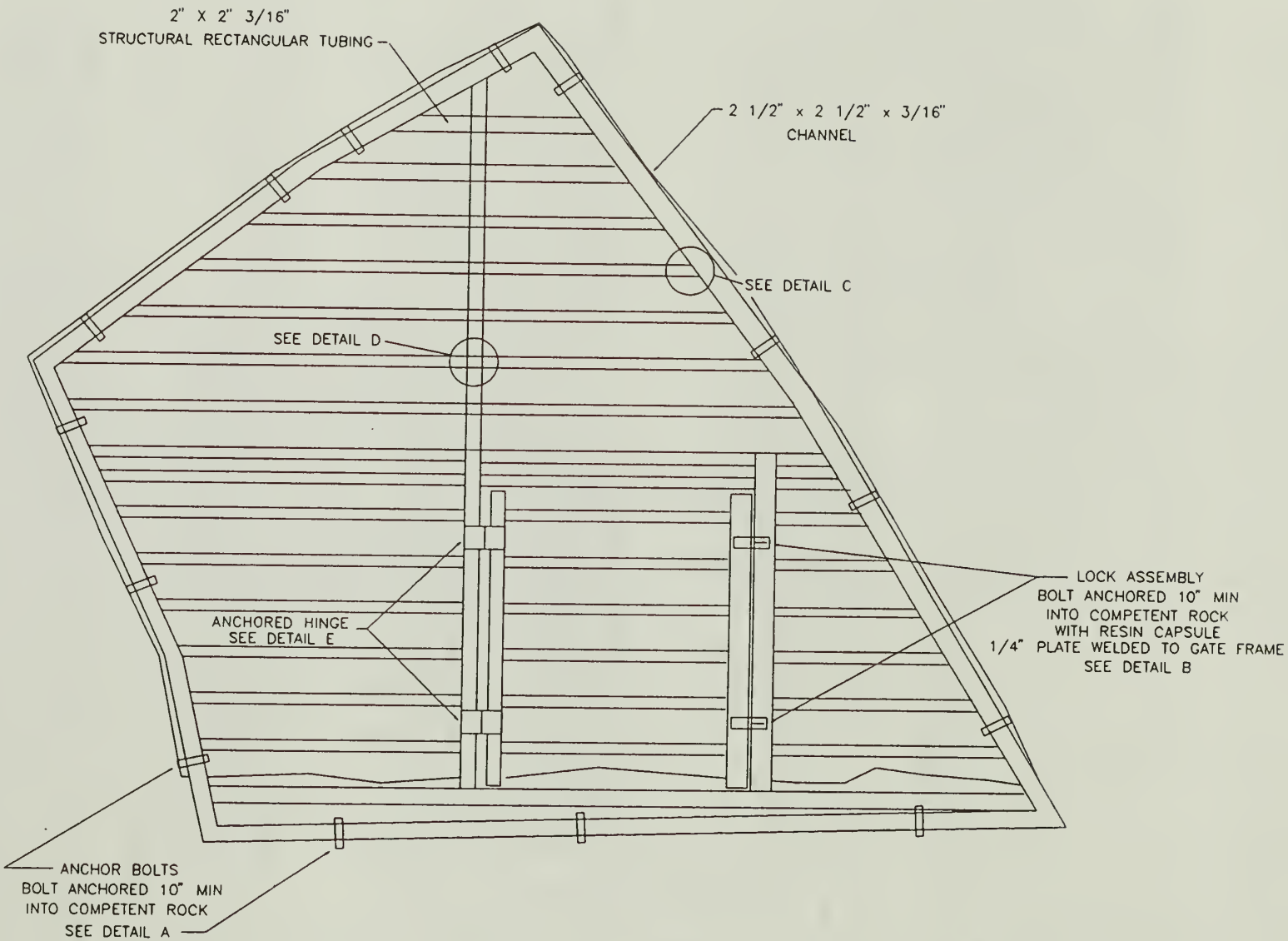

NOT TO SCALE

DECLINE SHAFT No. 2

Figure 17. Decline Shaft No. 2 Generic Closure Design

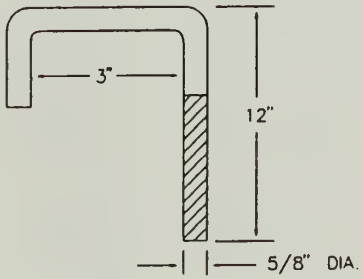

DETAIL A
ANCHOR BOLT

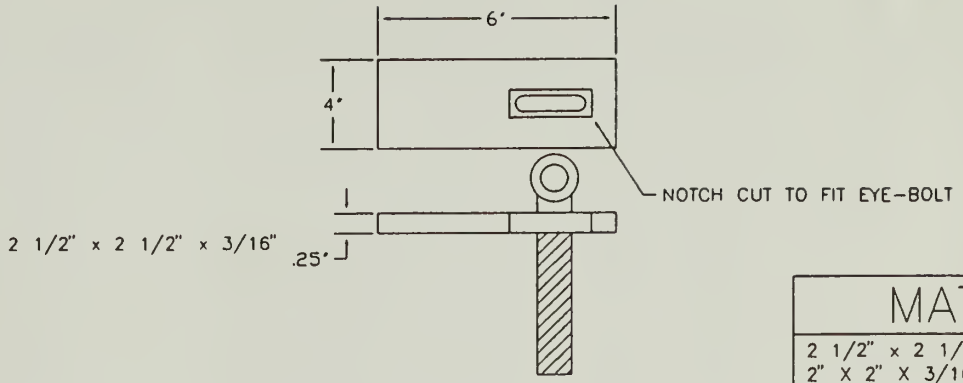

DETAIL B
LOCK ASSEMBLY

MATERIALS	
2 1/2" x 2 1/2" x 3/16" CHANNEL	51'
2" X 2" X 3/16" STRUC. REC. TUBING	120'
ANCHOR BOLTS	14
FULL MORTISE HEAVYWEIGHT BALL BEARING HINGE	2

NOTE: DETAILS NOT TO SCALE

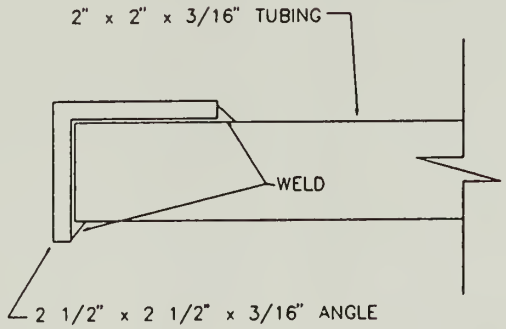

DETAIL C
FABRICATION

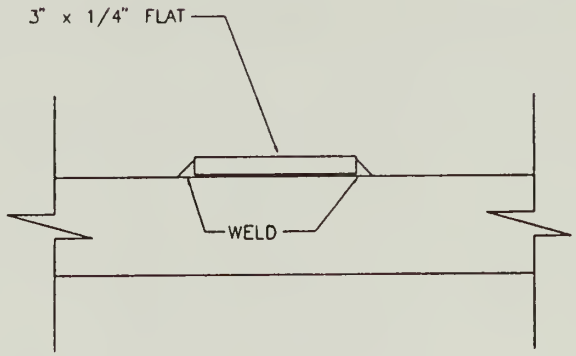

DETAIL D
FABRICATION

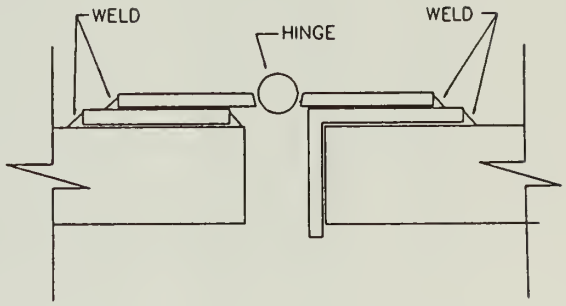

DETAIL E
HINGE

Figure 18. Fabrication Details For Decline Shaft No. 2.

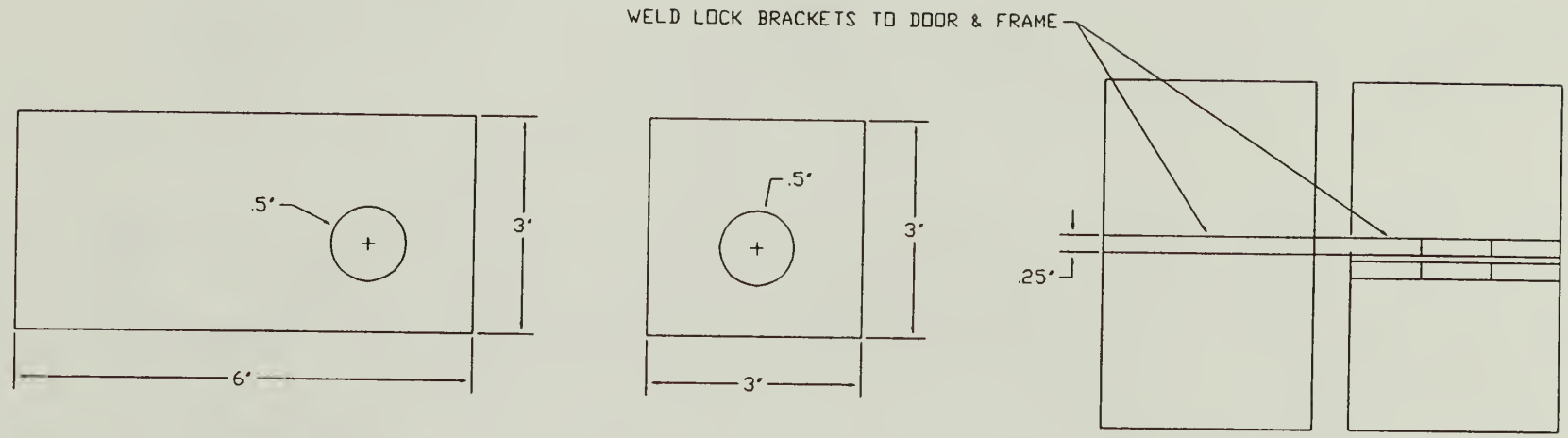

LOCK ASSEMBLY FOR MINE TUNNEL No. 1 & 2

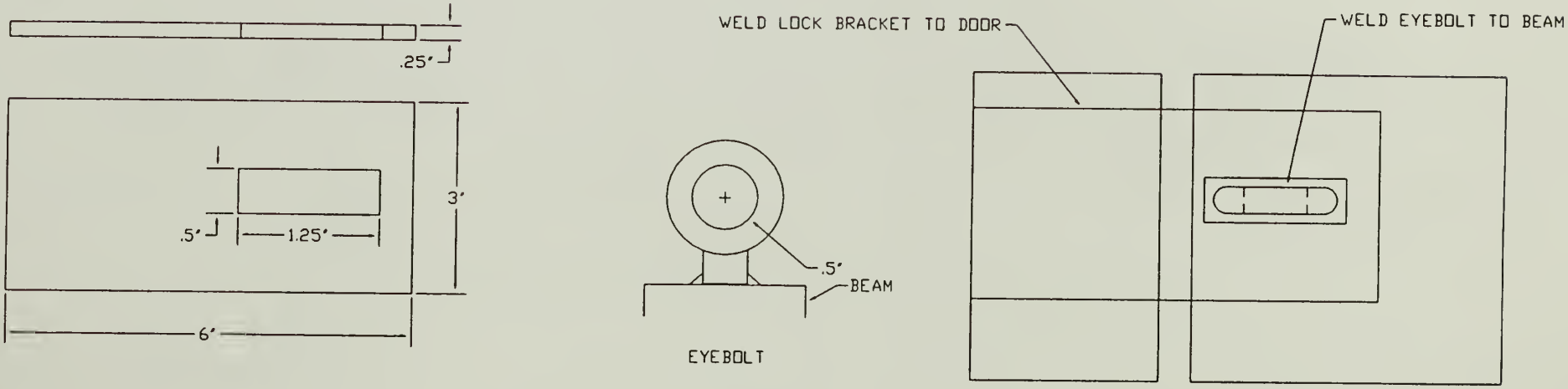

LOCK ASSEMBLY FOR DECLINE SHAFT No. 2

NOT TO SCALE

Figure 19. Security Systems For The Portals And Decline Shafts

should evaporate in the spring months with the warming conditions and the natural flows of ventilation.

The portal area above the Mine Tunnel No. 1 did not appear to have erosion occurring with the spring runoff and subsequent water drainage. However, the area in front of the tunnel was wet, and this, coupled with the nature of the ground, created slippery conditions. This is not perceived as a stability problem, but any grading should address the possibility of these conditions.

Mine Tunnel No. 2

The Mine Tunnel No. 2 showed the indications of water throughout the approximate 100 ft of horizontal workings. Spring runoff is entering the mine through the distinct set of fractured and weathered rock, but the total volume appeared low. The mine contained only one pool consisting of about 15 gallons of water. The water was restricted from flowing by fallen sidewall and roof material. The removal of this material would allow the water to dissipate and not cause any serious problems.

The portal area above the Mine Tunnel No. 2 is being eroded by an intermittent stream of runoff water. The volumes of water could be high if rapid warming trends in the spring or heavy rains occurred. The runoff water appears to be channeled into the portal area by a manmade trench constructed during the colonial period. Methods must be found to redirect the water away from the portal area or to prevent further portal erosion that could destabilize the rock around the portal. Additionally, the tree above the portal system may have to be removed to prevent the pressure caused on the rock mass by the continued growth of the root system. The existing root system should not be disturbed. The roots are interwoven into the rock mass, and any attempt to dislodge them may result in a massive failure above the portal area.

Walkways

The NPS asked that we examine the possibility of creating a wooden walkway in the mine that would keep visitors above the water and reduce the potential for slipping accidents. While a walkway could be constructed of pressure-treated lumber, there are no guarantees that the walkway will not experience wet or moist conditions as a result of the highly humid environment. Additionally, the introduction of a flammable material, such as wood, warrants concerns of the possibility of a fire. As improbable as this may seem, precautions such as fire extinguishers should be considered and are included in the safety guidelines section.

Calculations performed for the construction of a walkway for the Mine Tunnel No. 1, based on a design shown in figure 20, indicate that approximately 2,500 pieces of 2-in by 6-in by 12-ft pressure-treated lumber would be required. The structure should be fastened with deck screws to minimize wood separation due to shrinkage.

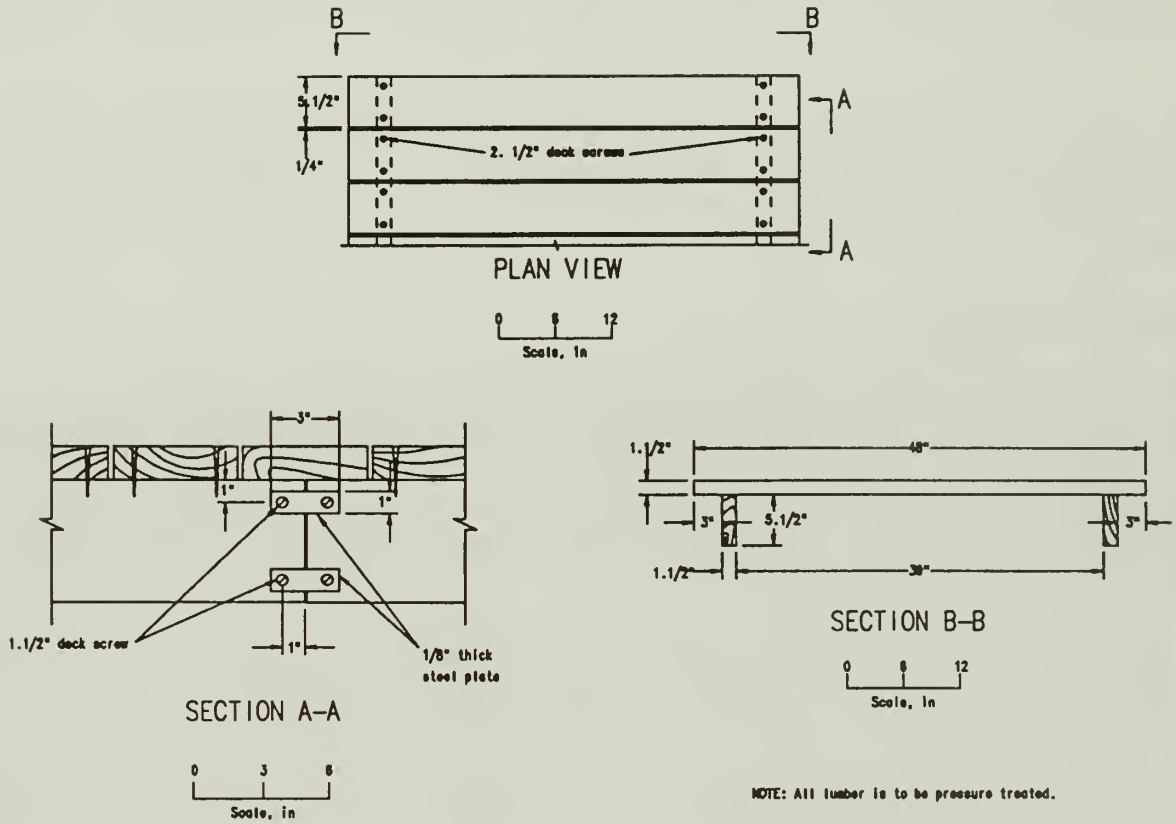

Figure 20. Walkway design for Mine Tunnel No. 1.

The water in both mines may be minimized when the fallen material has been removed from the floor area and portal gates have been installed. The prevention of pooled water and the natural ventilation should evaporate any mine water. The portal systems have been designed to allow for drainage from the floor and increase the natural ventilation in the tunnels to assist with the evaporation process. If required, a gravel material can be placed in the low areas to prevent slippage and still allow natural drainage and evaporation of the water. The aggregate or gravel could also be used to make a walkway.

PERIODIC EXAMINATION OF TUNNELS AND PORTALS

Once rehabilitated, the tunnels should be examined before and after the season by a qualified person. If the fracture zone in Mine Tunnel No. 1 and the portal area of Mine Tunnel No. 2 are reinforced, the inspection could be limited to one time per year, prior to the tourist season. This examination should be performed by either a qualified State or Federal mine inspector or an engineer who is qualified or experienced in ground control problems and hazard recognition in underground mines or tunnels. The inspection should also include the portal areas and the overlying rock above the portals. A written report should be included on the condition of the tunnels and portals. This inspection should note any hazardous

conditions that may have developed with time and specify the need for further corrective reinforcement measures, as well as identifying loose slabs and material that should be scaled. This suggested level and frequency of inspection is based on visitation to the mine tunnels by the public and should be increased if deteriorating conditions are noted.

The tunnels should also be examined prior to the admittance of visitors. Details concerning these inspections are provided in the Maintenance and Guidelines section on mine tours.

COST ESTIMATES

It is important to recognize that the lowest price may not result in the lowest total cost. This is especially true in mining situations when an injury or fatality can result in major expenses. The initial construction costs are based on representative wages and benefits provided by the NPS for this area (Appendix C). Because of the low roof height and narrow tunnel width, the use of most mechanized equipment to remove the material from the mine would be precluded; therefore, removal by manual labor was considered. There are several proposed options for each phase of the work, therefore, no overall project cost has been given. Three forms of transportation are considered for moving the material from the lower mine portal to the mill site. These include continued use of wheelbarrows, all-terrain vehicle (ATV), and a helicopter. For the ATV (wheel base 38 in) the trail would have to be widened to about 4 ft and at least two ramps constructed to allow for travel around the stream and old foundations.

Tunnel Stabilization - Mine Tunnel No. 1

Scaling

Scaling Cost: It is anticipated that scaling will be required regardless of any other proposed action. Approximately 16 hours by two men are estimated for this task.

Labor	$800
Equipment	200
Total	$1,000

No Reinforcement

No Reinforcement Cost: None - The work required for this task could be done during the annual tunnel inspection.

Roof Bolting

Roof Bolting Cost: Approximately 30 roof bolts would be required in Mine Tunnel No. 1 if this option is selected. It is estimated that this task can be performed in 18 hours by two laborers with the equipment and supplies as shown.

Labor	$1,200
Equipment:	
Stoper	300
Air Compressor	750
Materials (bolts, plates, resin)	300
Total	$2,550

Steel Sets

Steel Set Cost: The fabrication of steel sets should be accomplished by trained iron workers. It is estimated that the fabrication and placement of the steel sets, which have to be specifically built to fit the opening, would take two men 40 hours to construct five steel sets.

Labor cost	$2,500
Equipment cost	500
Material cost	2,500
Total	$5,500

Removal of Material -- Mine Tunnel No. 1

Material removal from the lower mine will be difficult and time consuming because of access and site limitations. Most of the material will have to be broken and loaded by hand. An estimate of 55 hours for two men at a laborers wage can be anticipated to perform the task.

Labor cost (breaking and loading)	$3,000
Equipment:	
Compressor	1,800
Jackhammer	700
Total	$5,500

Haulage of material from Mine Tunnel No. 1 to the mill site after it has been broken and loaded is a separate cost. Three alternatives have been estimated: manual removal (wheelbarrow), ATV, and helicopter. The helicopter would have the least amount of impact on the site.

Wheelbarrow

An estimate of 50 hours by four laborers.

Labor cost	$5,000
Equipment	500
Total	$5,500

All Terrain Vehicle (ATV)

This includes ramp construction at two locations requiring 8 hours and four laborers. Trail widening is also anticipated at four locations requiring 8 hours and four laborers.

Labor cost	$3,600
Equipment cost:	
ATV (rental $100/day)	600
Materials	800
Trail widening	1,600
Total	$6,600

Helicopter

The mobilization cost of a helicopter is $3,000 and the daily rate is $1,500. It is estimated that it will take about 28 trips to remove the material at $200/load. The bucket capacity of a helicopter is 1 yd^3. The swell or bulking factor of the material is 50 percent. The weight of 1 yd^3 of loose material is about 2,700 lb. A total of 28 trips, which includes two trips to pick up and drop off the bucket has been estimated.

Mobilization	$3,000
Trip Charge	5,600
Day charge	1,500

Personnel would be required to load the buckets underneath the helicopter. Based on loading 2,400 lb/hr and an efficiency rate of 60 percent, the cost of this labor for 50 hours for two men would be

Labor (load material)	2,500
Total	$12,600

In-Mine Stowing - Mine Tunnel No. 1

An alternative to removing the material from the lower mine is to stow it in the three dead-end drifts. The material could be stacked in these drifts to a height of approximately 2 ft, allowing access and observation of the roof and most of the sidewalls. Approximately 170 ft^3 of material could be stored in the first drift, 110 ft^3 in the second, and 400 ft^3 covering a length of 40 ft of drift at the back of the mine. This option would have the least visual impact on the site, but would prevent a complete examination of the underground workings.

The work could be performed in 50 hours by two laborers. The approximate distance of the material would be 70 to 170 ft, resulting in a 5-minute travel time. Based on 200 lb per trip, 350 total trips would be required. Based on an efficiency of 60 percent, the total time would be about 50 hours for two laborers.

Labor cost	$2,500
Compressor	1,800
Jackhammer	700
Total	$5,000

Tunnel Stabilization -- Mine No. 2

Scaling

Scaling Costs: This task should take an estimated 2 hours by 2 laborers.

Labor	$100
Equipment	50
Total	$150

No Reinforcement

Reinforcement Costs: None -- The required work for this task could be done during the annual tunnel inspection.

Roof Bolting

Roof Bolting Costs: Only four to six roof bolts will be installed in the portal area. It is estimated that this task can be performed in 6 hours by two laborers.

Labor	$350
Equipment:	
Stoper	100
Air compressor	50
Materials (bolts, plates, resin)	50
Total	$750

Removal of Material -- Mine Tunnel No. 2

This task should take an estimated 8 hours by two laborers. Because there is road access to within 100 ft of the tunnel, haulage of material to the mill site should not present a problem.

Labor	$400
Equipment	100
Total	$500

Removal of Material - Mill Site

Any material brought to the mill site would have to be reloaded with a front-end loader into trucks for removal. A basic assumption here is that the material can be relocated somewhere within the confines of the Park and no additional fees will be encountered.

Equipment cost:	
Truck	$400
Front End Loader	400
Labor cost	300
Total	$1,100

Portal System - Mine Tunnel No. 1

These costs are based on constructing the portal systems as described in the text. The estimates for labor and materials are presented with each option.

Option 1

Labor (16 hrs / 2 ironworkers)	$1,500
(16 hrs / 2 laborers, concrete)	1,250
Equipment	1,000
Materials	2,500
Total	$6,250

Option 2

Labor (16 hrs / 2 ironworkers)	$1,500
Equipment	500
Materials	1,000
Total	$3,000

Portal System - Mine Tunnel No. 2

These costs are based on constructing the portal systems as described in the text. The estimates for labor and materials are presented with each option.

Option 1

Labor (32 hrs / 2 ironworkers)	$2,800
Labor (16 hrs / 2 laborers, concrete)	1,250
Equipment	1,000
Materials	2,500
Total	$7,550

Option 2

Labor (16 hrs / 2 ironworkers)	$1,500
Equipment	500
Materials	1,000
Total	$3,000

Option 3

Labor (50 hrs / 2 ironworkers)	$ 4,000
(50 hrs / 1 laborer)	2,500
Equipment	1,000
Materials	4,000
Total	$11,500

Decline Shaft No. 2

Decline Shaft No. 2 costs are based on constructing the system in the text. The labor and material have been estimated to fabricate and place the structure over the decline shaft. The estimate does not include any additional funding for fencing materials or labor.

Labor (40 hrs / 2 ironworkers)	$ 3,500
(20 hrs / 2 laborers)	1,000
Transportation	1,000
Equipment	1,000
Material	4,500
Total	$11,000

Drainage Mine Tunnel No. 2 Portal Area

This estimate includes the time of four laborers for 16 hours each. Some materials may be required to complete the task, such as gravel. Transportation of this material is also included.

Labor	$2,000
Equipment	500
Materials	500
Total	$2,500

Tunnel Inspection

The cost of a qualified engineer to examine the tunnels and portals is based on one annual inspection and includes a report describing the results and recommendations. It is estimated the inspection would require 1 day for the inspection and 1 day for report preparation.

Total Cost of Engineering Inspection	$2,000

MAINTENANCE AND SAFETY GUIDELINES

This project requires two distinct sets of safety guidelines—one for the construction or rehabilitation phase and the other for the tour phase. Each phase will create specific challenges to provide for the safety and health of individuals working and touring the surface and underground workings. The results of inquiries to Federal and State agencies and basic safety recommendations for any underground operation are presented. Based on observations and conversations with Park officials, it would be recommended that the works be inspected before and after the season to make any required corrective action. Qualified NPS personnel should perform a visual inspection of the mine prior to the admittance of visitors or at least once a week, whichever applies.

Background

The Pahaquarry Copper Mines are located in the Pahaquarry Township in the State of New Jersey. As a part of our investigation, the USBM surveyed various agencies to determine if they had specific regulations that would apply to the use of the mines. An attempt was made to talk with officials at every level. The names and numbers of the officials providing the information are provided in the Appendix B of this report.

State Requirements

The New Jersey State Division of Mine Safety does not have jurisdiction over Federal lands and regulates only operating mines. If the mine were to be opened as an exhibit for tourism, it would not be under their supervision. There is a State law that requires signage stating the dangers of abandoned mines and laws requiring fencing for safety. A standard for the signage does not exist. Some examples from the Colorado Division of Mines are provided with this report.

The Department of Environmental Protection and Energy does not have regulations covering nonworking mines. The Division of Parks and Forestry oversees the State Park Service. Pahaquarry is on Federal lands, which are not within the scope of the State requirements.

County Requirements

There are no mining regulations in Warren County; State and Federal regulations apply.

Township Requirements

The township of Pahaquarry has no mining regulations.

American Disabilities Act (ADA) Requirements

ADA guidelines may have to be followed when opening this to the public. More research

into this law would be necessary for an informed recommendation and is beyond the scope of this report.

Federal Requirements

The following regulations have been extracted and modified from the "Code of Federal Regulations" CFR Title 30-Mineral Resources (*6*). These are the codes that normally apply to working mines. Part 57 regulations are metal and nonmetal mines other than coal. This set of regulations does not explicitly include inactive, nonworking or abandoned mines.

Construction Phase

It is suggested that the nearest MSHA Metal and Nonmetal Mine Safety and Health Subdistrict Office and the New Jersey Division of Mines be notified before starting operations of the approximate or actual date mine operation will commence. The notification shall include the mine name, location, the company name, mailing address, person in charge, and whether operations will be continuous or intermittent.

Personal Protection

All persons should wear suitable hard hats when in or around a mine where falling objects may create a hazard.

All persons should wear suitable protective footwear when in or around an area of a mine where a hazard exists that could cause an injury to the feet.

All persons should wear safety glasses, goggles, or face shields or other suitable protective devices when in or around an area of a mine where a hazard exists that could cause injury to unprotected eyes.

First-Aid Training

Selected supervisors should be trained in first aid. First-aid training should be made available to all interested employees. Adequate first-aid materials, including stretchers and blankets should be provided at places convenient to all working areas. Water or neutralizing agents should be available where corrosive chemicals or other harmful substances are stored, handled, or used.

Arrangements should be made in advance for obtaining emergency medical assistance and transportation for injured persons.

Provisions and Maintenance of Self-Rescue Devices

A 1-hour self-rescue device approved by the MSHA should be made available by the contractor to all personnel underground. Each contractor should maintain self-rescue devices in good condition, as prescribed by MSHA.

Emergency Communications System

A suitable communication system should be provided at the mine to obtain assistance in the event of an emergency. Telephones or walkie-talkies are suggested.

Machinery and Equipment

Power drills, disc sanders, grinders, and circular and chain saws, when used in the hand-held mode should be operated with controls that require constant hand or finger pressure. Circular saws and chain saws should not be equipped with devices that lock-on the operating controls.

Miscellaneous

Intoxicating beverages and narcotics

Intoxicating beverages and narcotics should not be permitted or used in or around mines. Persons under the influence of alcohol or narcotics should not be permitted on the site.

Housekeeping

During the construction phase, work places, passageways, storerooms, and service areas should be kept clean and orderly. The floor of every workplace should be maintained in a clean and, so far as possible, dry condition. Where wet processes are used, drainage should be maintained, and false floors, platforms, mats, or other dry standing places should be provided where practicable, and every floor, working place, and passageway should be kept free from protruding nails, splinters, holes, or loose boards, as practical.

Barricades and warning signs and mine openings

Areas where health or safety hazards exist that are not immediately obvious to employees should be barricaded, or warning signs should be posted at all approaches. Warning signs should be readily visible, legible, and display the nature of the hazard and any protective action required.

Access to unattended mine openings should be restricted by gates or doors, or the openings should be fenced and posted. This is a part of the construction phase, but access should be limited to construction personnel only until it has been determined that it is safe for tourists.

Safety Programs

It is recommended that a competent person should examine each working place at least once each shift for conditions that may adversely affect safety or health. Appropriate actions to correct such conditions should be promptly initiated. The contractors will probably have their own safety program in place. However, the NPS should review this plan and make sure that it is adequate.

A record that such examinations were conducted should be kept for a period of 1 year. In addition, conditions that may present an imminent danger that are noted by the person conducting the examination should be brought to the immediate attention of the operator who should withdraw all persons from the area affected (except persons referred to in section 104(c) of the Federal Mine Safety and Health Act of 1977) until the danger is abated.

Designation of person in charge

When persons are working at the mine, a competent person designated by the NPS should be in attendance to take charge in case of an emergency.

Ground control

It is recommended that daily inspections be conducted of the underground workings, especially if work has been or is going to be conducted. The person should be qualified to perform underground inspections. The area should be scaled.

All remedial work performed in the underground mines should be after the installation of temporary support. This includes any roof support, steel set installation, or portal rehabilitation.

Correction of hazardous conditions

Ground conditions that create a hazard to persons should be taken down or supported by qualified persons before other work or travel is permitted in the affected area. Until corrective work is completed, the area should be posted with a warning against entry and, when left unattended, a barrier should be installed to impede unauthorized entry.

Scaling should be performed from a location that will not expose persons to injury from falling material, or other protection from falling material should be provided. Scaling should be done only by qualified persons. Where manual scaling is performed, a scaling bar should be provided. This bar should be of a length and design that will allow the removal of loose material without exposing the person performing the work to injury.

Working alone

No employees should be assigned, or allowed, or be required to perform work alone in any area where hazardous conditions exist that would endanger their safety unless they can communicate with others, their cries for help can be heard, or they can be seen.

Firefighting Procedures

Multipurpose dry-chemical fire extinguisher

An extinguisher having a rating of at least 2-A:10-B:C and containing a nominal 4.5 pounds or more of dry-chemical agent.

Fires should not be lit underground.

For fighting fires that could endanger persons, the recommendation is onsite fire fighting equipment (fire extinguishers) for fighting fires in their early stages. This fire fighting equipment should be of the type, size, and quantity that can extinguish fires of any class that would occur as a result of the hazards present, and it should be strategically located, readily accessible, plainly marked, and maintained in fire-ready condition.

Fire fighting equipment should be inspected according to the following schedules:

(1) Fire extinguishers should be inspected visually at least once a month to determine that they are fully charged and operable.

(2) At least once every 12 months, maintenance checks should be made of mechanical parts, the amount and condition of extinguishing agent and expellant, and the condition of the hose, nozzle, and vessel to determine that the fire extinguishers will operate effectively.

Fire extinguishers should be recharged or replaced with a fully charged extinguisher promptly after any discharge.

Flammable liquids should not be used for cleaning. Solvents should not be used near an open flame or other ignition source, near any source of heat, or in an atmosphere that can elevate the temperature of the solvent above the flash point.

Heat sources capable of producing combustion should be separated from combustible materials if a fire hazard could be created.

Escape routes

Escape routes should be inspected at regular intervals and maintained in safe, travelable condition and should be marked with conspicuous and easily read direction signs that clearly indicate the ways of escape. These may only be required in Mine Tunnel No. 1.

Check-In, Check-Out System

During the construction phase the underground mine should establish a check-in and check-out system to provide an accurate record of persons in the mine. These records should be kept on the surface in a place chosen to minimize the danger of destruction by fire or other hazards. Every person underground should carry a positive means of identification.

Ventilation

Ventilation may be required during the construction phase to provide fresh air and remove any contaminated air. A plan of the mine ventilation system should be set out by the contractor in written form. Revisions of the system should be noted and updated if changed.

Tours Phase

Public Safety Guidelines

Personal Protection

All persons should wear suitable hard hats when in or around a mine or plant where falling objects may create a hazard.

All persons should wear suitable protective footwear when in or around an area of a mine or plant where a hazard exists that could cause an injury to the feet. Bare feet are unacceptable.

All persons should wear safety glasses, goggles, or other suitable protective devices where a hazard exists that could cause injury to unprotected eyes. Prescription glasses and sun glasses are not sufficient.

Selected employees should be trained in first aid. First aid training should be made available to all interested employees. Adequate first aid materials, including stretchers and blankets, should be provided at places convenient to all working areas.

Emergency Communications System

A suitable communication system should be provided at the mine to obtain assistance in the event of an emergency.

Illumination

Hand-held illumination (flashlights) are not recommended because if a fall occurs, the person would be unable to break the fall, and the flashlight may cause injury. Additionally, the flashlight could be damaged, leaving the person in the dark. A battery-powered cap lamp attached to the hard-hat is recommended.

Exterior lighting sufficient to provide safe conditions for all surface structures, paths, walkways, stairways, and working areas is necessary.

Check-In, Check-Out System

It is recommended a check-in and check-out system be established to provide an accurate record of persons in the mine. These records should be kept on the surface in a place chosen to minimize the danger of destruction by fire or other hazards. Every person underground should carry a positive means of identification.

Travelways and Escapeways

Where restricted clearance creates a hazard to persons, the restricted clearance should be conspicuously marked. Openings above, below, or near travelways through which persons may fall should be protected by railings, barriers, or covers. Where it is impractical to install such protective devices, adequate warning signals should be installed.

Regularly used walkways and travelways should be sanded, salted, or cleared of snow and ice as soon as practicable.

Miscellaneous

Intoxicating beverages and narcotics

Intoxicating beverages and narcotics should not be permitted or used in or around mines. Persons under the influence of alcohol or narcotics should not be permitted on the site.

Housekeeping

Passageways and service areas should be kept clean and orderly. The floor of the mines should be maintained in a clean and, so far as possible, dry condition. Where wet processes are used, drainage should be maintained, and false floors, platforms, mats, or other dry standing places should be provided where practicable. Every floor and passageway should be kept free from protruding nails, splinters, holes, or loose boards, as practicable.

Barricades, warning signs and mine openings

Areas where health or safety hazards exist that are not immediately obvious to employees and visitors should be barricaded, or warning signs should be posted at all approaches. Warning signs should be readily visible, legible, and display the nature of the hazard and any protective action required.

Access to unattended mine openings should be restricted by gates or doors, or the openings should be fenced and posted.

Maintenance Safety Guidelines

Designation of Person in Charge

When persons are working at the mine, a competent person designated by the mine operator should be in attendance to take charge in case of a emergency.

Safety Programs

It is recommended that a competent person should examine the underground workings at least once each day when tours are scheduled for conditions that may adversely affect safety or health. The person who is inspecting the mines should be experienced in examining and testing the roof and sidewalls for loose material and be experienced in the recognition of hazards that can develop in underground mines. A minimum requirement might be the MSHA 40-hour new miner training or the Roof Control Specialist training offered by MSHA. Appropriate actions to correct such conditions should be promptly initiated. A record that such examinations were conducted should be kept by the NPS for a period of 1 year. In addition, conditions that may present an imminent danger that are noted by the person conducting the examination should be brought to the immediate attention of the NPS who should withdraw all persons from the area affected until the danger is abated.

Correction of hazardous conditions

Ground conditions that create a hazard to persons should be taken down or supported by qualified persons before travel is permitted in the affected area. Until corrective work is completed, the area should be posted with a warning against entry and, when left unattended, a barrier should be installed to impede unauthorized entry.

Scaling should be performed from a location that will not expose persons to injury from falling material, or other protection from falling material should be provided. Scaling should only be done by qualified persons. Where manual scaling is performed, a scaling bar should be provided. This bar should be of a length and design that will allow the removal of loose material without exposing the person performing the work to injury.

Working alone

No employees should be assigned, or allowed, or be required to perform work alone in any area where hazardous conditions exist that would endanger their safety unless they can communicate with others, their cries for help can be heard, or they can be seen.

Additional Guidelines

Here is additional information on other mines that are open for tours and the general public.

The Sterling Hill Mine - Sparta, Sussex Co., New Jersey

Originally this was a zinc mine that closed in 1986 and is currently classified as inactive. The public portions of the mine are at adit level. The adits are 900 ft to 1,000 ft back; there are an additional 36 miles of workings down to 2,550 ft that are flooded. The mine has annual inspections by the State mine inspectors. Local laws concerning fire and safety were used for opening this facility to the public. Additional lighting, backup lighting, and a second entrance were required to open to the public. The State mine department was involved when they put in the second entrance and because some previous workings were subsiding.

Argo Mine and Mill - Idaho Springs, Colorado

The Argo Mine and Mill were originally used to mine and then mill gold during the rush of 1859. This facility is on the Historic Register, which means it has State or local significance. There are guided tours through both the mine and the mill. Hard hats are offered but not all visitors choose to wear them. A mine safety inspector from the State comes once a year to inspect for loose rock and the condition of the entrance at the exterior edge. The safety requirements are to have hard hats and fire extinguishers. MSHA requirements have not been applied to this mine. In general, building codes more than mining regulations were necessary to open the mine and mill to the public. To meet the American Disabilities Act (ADA) the floor of the mine was graded, but the mill is not very accessible.

CONCLUSIONS

The Pahaquarry Mines, located in the Delaware Water Gap National Recreation Area in New Jersey, are inactive copper mines that the NPS desires to open to the public for interpretive tours. The results of this investigation indicate that this should be possible with a limited amount of risk to Parks personnel and visitors if proper precautions are taken to stabilize the underground openings. The stabilization may impact the appearance of the mines and require routine maintenance and periodic inspections. In summary, the USBM findings are

- The water quality analysis of samples collected from ponds within each respective mine indicates that the water is similar in composition to naturally occurring unpolluted waters.

There are no significant metal concentrations or reduction in pH in the mine waters resulting from contact with mineralized zones.

- The air quality, sampled with a hand-held meter, indicated that oxygen was similar to outside air; no methane or carbon monoxide gases were detected. Radon test sampling indicated levels that warrant continued investigation, particularly in Mine Tunnel No. 1. These results have already been conveyed to the NPS.

- Mine stabilization options are presented for Mine Tunnel No. 1 and No. 2 that clearly show that there is a delicate balance between the visual impact of the selected support method and the degree of safety. A more aggressive remedial treatment will result in a higher degree of safety. No matter which method is selected, the NPS should continue to monitor and maintain the mines to minimize the risk.

- Several portal closure options are presented that can be effectively used on Mine Tunnel No. 1 or No. 2. Ventilation may be an important option when selecting the portal closure system. Ventilation will help keep the mines dry, dilute potential radon gases, and provide fresh air for visitors.

- The water eroding the portal area above Mine Tunnel No. 2 should be eliminated by the construction of drainage ditches. This will minimize the erosion presently taking place at the portal area. Additionally, the fallen material presently on the mine floors may be restricting the flow and evaporation of water. This material also creates tripping hazards.

A list of maintenance and safety guidelines have been formulated for the NPS. The guidelines have been created by inquiring about Federal, State, and local regulations, as well as practical safety issues when dealing with underground and surface mines.

BIBLIOGRAPHY

1. Stednick, J. D. Wildland Water Quality Sampling and Analysis, Academic Press, 1991, 217 pp.

2. Colorado Water Quality Control Division. Nonpoint Source Management Program. 102 pp.

3. Reed, W. H. Copper Deposits of the Appalachian States, USGS Bull, 455, 1911, 166 pp.

4. Cornwall, H. R. Confidential USGS report, 1943, available from Phil Cloues, National Park Service.

5. Hem, J. D. Study and Interpretation of the Chemical Characteristics of Natural Water, USGS Water-Supply Paper 2254, 1992, 264 pp.

6. U. S. Code of Federal Regulations. Title 30 -- Mineral Resources; Chapter 1 -- Mine Safety and Health Administration, Department of Labor. 1991.

APPENDIX A

BUREAU OF MINES REVIEW TEAM

The U. S. Bureau of Mines assembled a team of experienced personnel and charged them to undertake the review. The team members are listed in Table A-1. Members were from the U. S. Bureau of Mines, Denver Research Center, Geotechnology and Environmental Sciences Division.

Table A-1
Pahaquarry Copper Mines Review Team

Frederick Allgaier, Research Supervisor
Dennis Dolinar, Mining Engineer
Stephen Tadolini, Mining Engineer
Valois Shea-Albin, Material Engineer
Terry Henderson, Geological Engineer
Jamie Gallagher, Geophysical Engineer
Paul DiGrado, Engineering Technician
Robert Holub, Physicist

APPENDIX B
CONTACTS LIST

Below is a specific list of the personnel at Federal, State, and local agencies contacted for specific information pertaining to this investigation.

Table A-2

State of New Jersey

Department of Labor, Division of Mine Safety:

Jim Corey, Inspector (609) 292-2096;
Mario Gomes, Supervisor (609) 292-2096

Division of Park and Forestry:

Michelle Fort, Secretary (609) 292-2797

Warren County:

Marie Chisamore, Office Supervisor (908) 475-8000;
Stanley Wessner, Principal Planning Aide (908) 475-8000.

Pahaquarry Township:

Judy Hanke, Clerk (908) 362-8315
Ted Rodman, Engineer (908) 362-6079

Sterling Hill Mine, Sussex County, NJ:

Elna Hauck, Volunteer (201) 209-7212
Robert Hauck, Board of Directors, Treasurer, Tour Guide (201) 209-7212

Argo Gold Mine and Mill, Idaho Springs, CO:

Daryl Chauncy, Program Director (303) 567-2421

APPENDIX C
COST INFORMATION

The Davis Bacon Rates used for estimating the cost associated with this project are categorized below. In the event that a prevailing wage rate for any job is higher, than that higher rate must be used.

	Base Rate	Fringe Benefits
Carpenter	$25.22	34%
Millwright	$25.47	34%
Helicopter Pilot	$30.75	$11.90+A+B
Welding Operator	$24.03	$11.90+A+B
Backhoe/Front End Loader	$27.75	$11.90+A+B
Ironworkers	$20.00	$10.25
Laborer: Building Construction	$17.00	$8.00
Laborer: Heavy Construction	$18.90	$7.05+U
Blasters	$23.15	$7.05+U
Miners/Drillers	$19.75	$7.05+U
Truck Drivers	$22.60	$7.04+U

A = Paid Holidays
B = 20% premium on hazardous work
U = Paid Holidays

The final equation for determining final cost is

1.25 (Labor + Equipment + Material) = Total Base Cost

add 10% (Total Base Cost) =
add 5% (Total Base Cost) =

The 1.25 multiplying factor includes a 20% backcountry premium. The 10% and 5% are profit margin and cost fee for administering a government contract.

APPENDIX D
DESCRIPTIVE PHOTOGRAPHS

Still photographs and a video film were taken during the site investigation. One copy of the video tape has been provided to the NPS as a part of this report. The following photos are from the area around Mine Tunnel No. 1 and Mine Tunnel No. 2. The approximate photo locations are provided on a plan view of the underground workings.

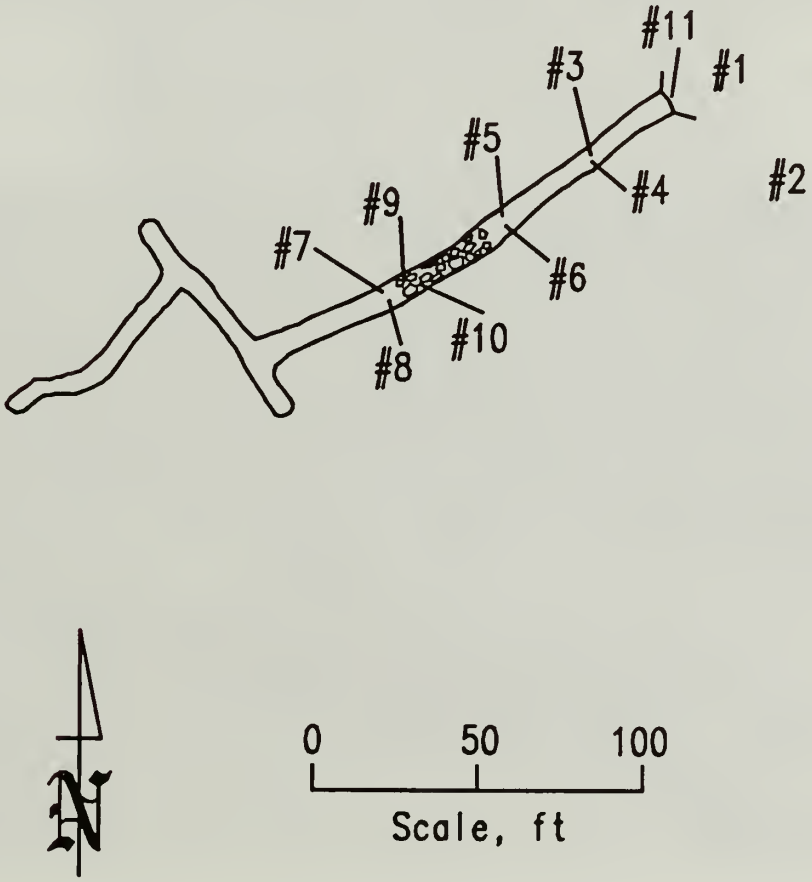

Mine Tunnel No. 1

Photograph 1. Front View of Mine Tunnel No. 1 portal area.

Photograph 2. Looking south up Mine Brook outside of Mine Tunnel No. 1.

Photograph 3. Looking outward to portal of Mine Tunnel No. 1. Note material on the floor and sidewall conditions.

Photograph 4. Looking outward to portal of Mine Tunnel No. 1. Note water on floor and roof conditions.

Photograph 5. Looking inward in Mine Tunnel No. 1. Note foot wall condition (left side) and material under hanging wall (right side).

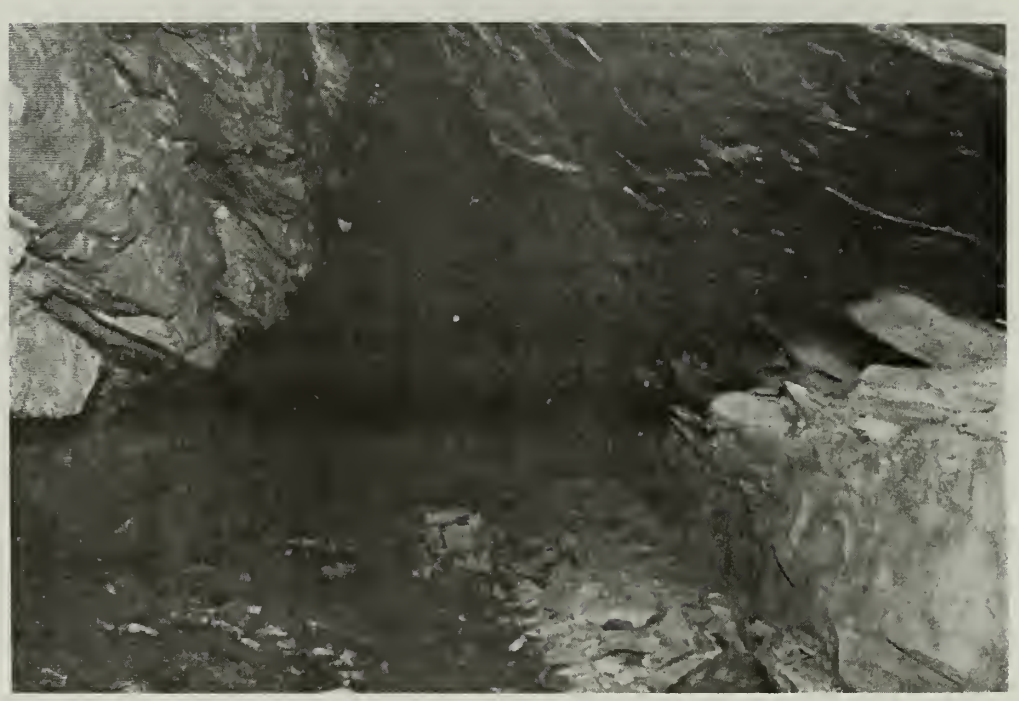

Photograph 6. Looking inward in Mine Tunnel No. 1. Note condition of the hanging wall (right side).

Photograph 7. Looking outward in Mine Tunnel No. 1. Note slab thickness on hanging wall, approximately 18 thick.

Photograph 8. Looking outward in Mine Tunnel No. 1. Note slab on top, left side, and second slab underneath the hanging wall.

Photograph 9. Looking inward in Mine Tunnel No. 1. Water depth was approximately 5 inches.

Photograph 10. Slab formation on hanging wall in Mine Tunnel No. 1.

Photograph 11. Portal of Mine Tunnel No. 1 with existing closure fabricated from wood.

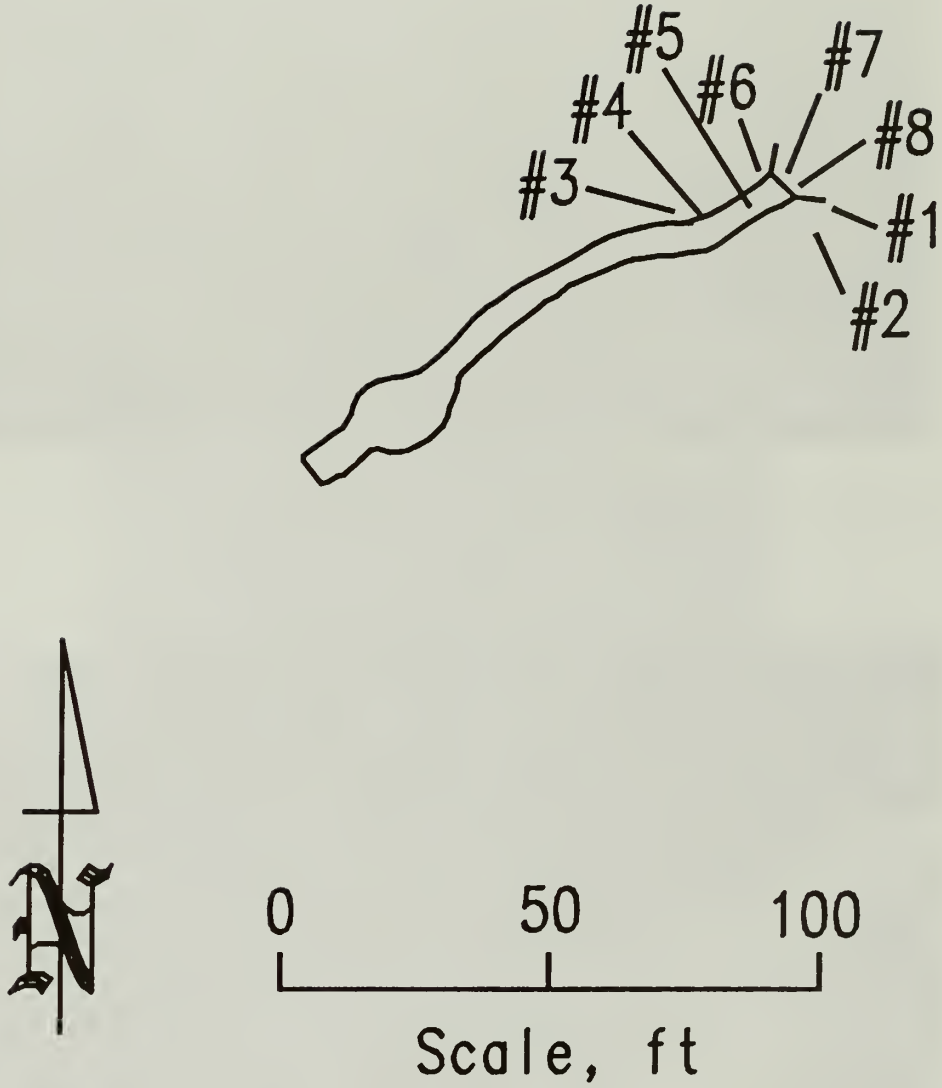

Mine Tunnel No. 2

Photograph 1. The tree and root system above Mine Tunnel No. 2. Note the degree of erosion caused by surface drainage.

Photograph 2. The tree and root system above Mine Tunnel No. 2. Note the undermining of the rocks on the right at the portal caused by the surface drainage down a manmade trench (colonial period).

Photograph 3. The portal area at Mine Tunnel No. 2. Note the blocky structure and jointing above the door area. The rock just above the door may need to be supported.

Photograph 4. The top portion of the portal door of Mine Tunnel No. 2. Note the wet condition of the wood which indicates run-off water at the portal area.

Photograph 5. The immediate roof looking outby from about 10 ft inside the mine. Note the rock projecting from the roof just above the door. This rock may require supporting.

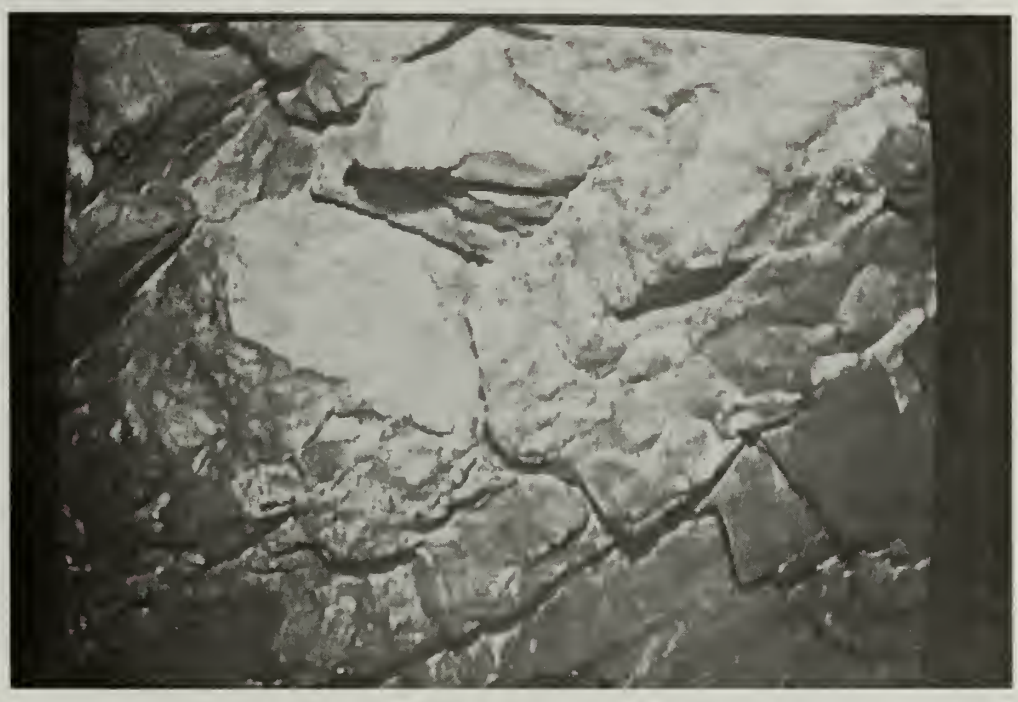

Photograph 6. The jointing system of the immediate roof about 10 ft inside Mine Tunnel No. 2.

Photograph 7. The sidewalls and floor in Mine Tunnel No. 2. Note the small amount of material along the sidewalls.

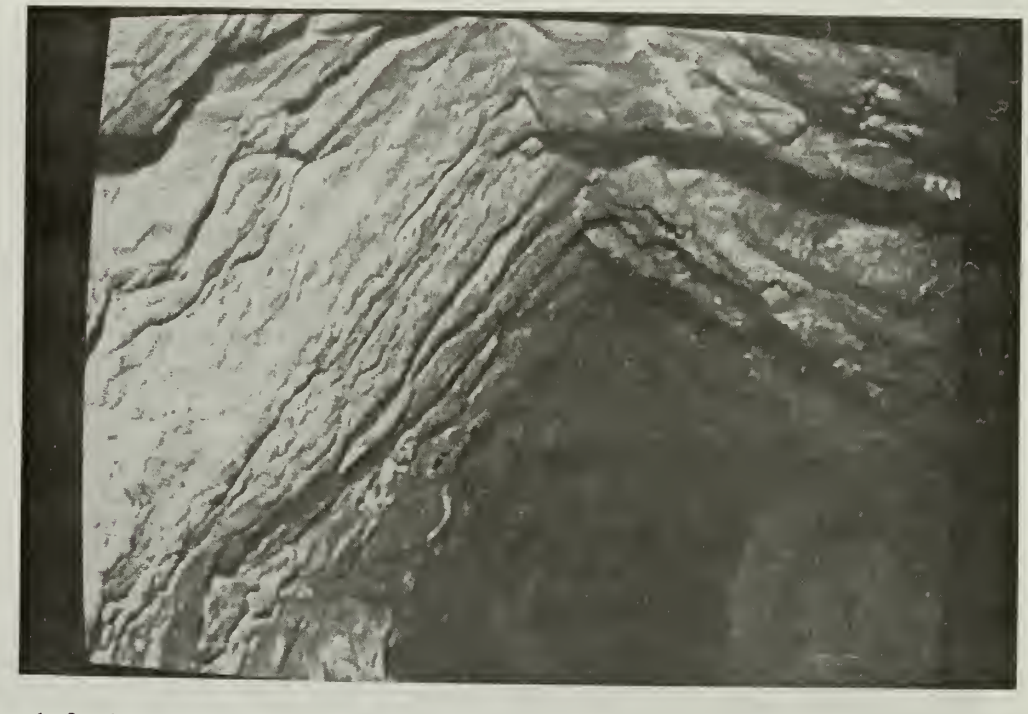

Photograph 8. The roof area in Mine Tunnel No. 2 as photographed at the time of the investigation. The flat angled roof is formed along a shale bed, resulting in a good roof condition.

APPENDIX E
ROOF BOLT AND RESIN REQUIREMENTS

Roof Bolt Specifications

The bolts should be a type 60 ASTM steel (60,000 psi yield strength) 3/4-in-diameter rebar with a minimum load capacity of 26,500 lb or a cable with the equivalent or greater load capacity. The following are a list of manufacturers that can provide the product that meets these specifications:

Birmingham Bolt
P.O. Box 1208
Birmingham, AL 35201-1208

Dywidag Systems International
376 Creekside Drive
Avon Lake, OH 44012

Jenmar Corporation
1330 Old Freeport Road
Pittsburgh, PA 15238-4100

Rocky Mountain Bolt Co.
1215 South Pioneer Road
Salt Lake City, UT 84104

Resin Specifications

The resin cartridges should provide a minimum of 2 ft of anchorage along the upper portion of the bolt. It is recommended that a resin curing time of no less than 2 minutes be used. However, final resin requirements can be determined by the resin manufacturer depending on the type of reinforcement used and the method of installation. Below is a list of resin suppliers:

E. I. duPont de Nemours & Co., Inc.
P.O. Drawer 863
Martinsburg, WV 25401

Sandvik Rock Tools, Inc.
P.O. Box 639
Bristol, VA 24203-0639

Celtite
P.O. Box 3124
Grand Junction, CO 81501

APPENDIX I

Coastal Environmental Services, Inc. "Vegetation Mapping and Analysis Pahaquarry Copper Mine Site Delaware Water Gap." Princeton, N.J.: Prepared for the National Park Service by Coastal Environmental Services, Inc., January 1994

COASTAL ENVIRONMENTAL, INC.

VEGETATION MAPPING AND ANALYSIS

PAHAQUARRY COPPER MINE SITE

DELAWARE WATER GAP

Prepared for:

National Parks Service
12795 West Alameda Parkway
P.O. Box 25287
Denver, CO 80225
Work Order #14
Contract No. CX-2000-1-0018

Prepared by:

Coastal Environmental Services, Inc.
2 Research Way
Princeton, NJ 08540

January 1994

VEGETATION MAPPING AND ANALYSIS

PAHAQUARRY COPPER MINE SITE

DELAWARE WATER GAP

Prepared for:

National Parks Service
12795 West Alameda Parkway
P.O. Box 25287
Denver, CO 80225
Work Order #14 Contract No. CX-2000-1-0018

Prepared by:

Coastal Environmental Services, Inc.
2 Research Way
Princeton, NJ 08540

January 1994

TABLE OF CONTENTS

I. INTRODUCTION 1
- A. Study Area 1
- B. Regional Forest Context 2

II. METHODS 3
- A. Aerial Photo Interpretation 3
- B. Sampling Design 3
- C. Field and Laboratory Procedures 5
  - 1.0 Soils 5
  - 2.0 Vegetation 5
- D. Data Analysis 5

III. RESULTS 8
- A. Soils 8
- B. Species-Environmental Relationships 10
  - 1.0 Abundance 10
  - 2.0 Basal Area 12
  - 3.0 Importance Value 13
  - 4.0 Diversity 14

IV. DISCUSSION 15
- A. Vegetation Structure 15
- B. Species-Environmental Relationships 15
- C. Vegetation Associations Within the Study Area 16
  - 1.0 Mixed Oak Associations 16
    - 1.1 Mixed Oak Forest (MO) 16
    - 1.2 Mixed Oak/Kalmia (MO/K) 16
    - 1.3 Chestnut Oak Forest (CO) 17
    - 1.4 Chestnut Oak/Rhododendron (CO/R) 17
    - 1.5 Mixed Hardwood/Rhododendron (MH/R) 17
  - 2.0 Hemlock Association 18
    - 2.1 Hemlock/Mixed Hardwood/Rhododendron (H/MH/R) 18
    - 2.2 Hemlock/Mixed Hardwood (H/MH) 18
    - 2.3 Hemlock/Chestnut Oak (H/CO) 18
    - 2.4 Hemlock 19
  - 3.0 Black Birch Association 20
    - 3.1 Black Birch/Mixed Hardwood (BB/MH) 20
    - 3.2 Mixed Birch/Rhododendron (BB/MH) 20
  - 4.0 Other Associations 20
    - 4.1 Pine/Oak (P/O) 20
    - 4.2 Bare Rock 20
    - 4.3 Bare Soil 21

IV. SUMMARY 22

TABLE OF CONTENTS cont'd

APPENDICES

Appendix A. Vegetation Analysis
Appendix B. Vegetation Associations and Quadrat Information
Appendix C. Importance Values
Appendix D. List of Species and Indicator Status
Appendix E. Soil Nutrient Data
Appendix F. % Similarity Measures
Appendix G. Vegetation Map

FIGURES

Figure 1. Site Location Map
Figure 2. USGS Topographic Map
Figure 3. Geological Profile
Figure 4. Soils Map
Figure 5. Vegetation Profile
Figure 6. Vegetation Map

TABLES

Table 1. Slope, Aspect and Radiation Index
Table 2. Summary of Vegetational Indices
Table 3. Soil Data
Table 4. Species Abundance Along an Elevational Gradient
Table 5. Species Abundance
Table 6. Basal Area Along an Elevational Gradient
Table 7. Diversity Along an Elevational Gradient

EXECUTIVE SUMMARY

The vegetation of the Pahaquarry Copper Mine site was mapped and analyzed in an effort to document the vegetation communities on the site and to understand species-environmental relationships. Plant cover was mapped using aerial photointerpretation and a stratified sampling scheme was developed to provide ground truthing. Vegetation composition and soils, along with slope, aspect, and elevation in 12 quadrats were studied to determine the factors influencing the distribution of the major vegetation communities on the site.

After correlating the changes in communities with changes in environmental factors, it appeared that the major differences within the site were slope, aspect, and site disturbance. The presence of Acer rubrum, Quercus prinus, and Betula lenta were most likely present due to low soil pH. Hemlock was associated with cool, moist north-facing slopes, with the exception of the Hemlock community along the steep north-west facing ridge. This association was found on very steep (76%) slopes and is limited by annual potential solar radiation. Black birch associations were limited by site disturbances and appeared to be in areas with highest degree of disturbance. The disturbances included selective cutting, clearing for pasture, burns, and activities associated with the past copper mining activity.

PAHAQUARRY VEGETATION MAPPING

I. INTRODUCTION

Coastal Environmental Services, Inc., at the request of the National Park Service (NPS), mapped the vegetative communities at the Pahaquarry Copper Mine site. Detailed field data was collected and mapped on stable-base mylar at a scale of 1" = 100'. The information is to be an integral part of a cultural landscape report being developed by the National Park Service. To supplement the map, a narrative description of each plant community and the factors limiting their growth were included.

A. Study Area

The Pahaquarry Site is located on the eastern side of the Delaware Water Gap Recreational Area (see Figure 1) in Warren County, New Jersey, along Old Mine Road. The site is bisected by Mine Brook, a tributary to the Delaware River that enters the Delaware at the downstream end of Poxono Island. The site is situated on the lower portion of the northwest side of Kittatinny Mountain (see Figure 2). The Pahaquarry Copper Mines study area is approximately 144 acres (58 hectares).

A generalized geological profile of the area (see Fig. 3) shows that the geological profile of Kittatinny Mountain consists of extensively folded, interbedded strata of sedimentary rocks. According to James S. Yolton (1984), "The exposed rock in the steep-walled ravine of Mine brook is the Middle Silurian High Falls (Bloomsburg in Pennsylvania), a 1500 foot thick formation of mottled red and gray-green mudstone and sandstone. Locally the sandstone is stained along the bedding planes and joint surfaces with a bright green coating of the hydrous copper carbonate mineral malachite." In addition, the copper sulfide chalcocite is disseminated through the sandstone and comprises approximately 2.0 to 3.25 percent of it.

The top of Kittatinny Mountain is approximately 1400 feet above mean sea level (MSL). The study area only extends to about 900 feet above MSL and is mostly underlain with younger limestones and shales.

The area is located north of the Wisconsin terminal moraine and most of the site is on well-drained uplands. According to the Warren County soil survey (see Figure 4), soils adjacent to the Delaware River to about 250' from the river are Pope Fine sandy loam 0-3% (PnA). From here to about 500' from the river is Hazen Gravelly Loams, 8-15% (Hfc), from 500 to 800' is Swartswood-Oquaqa extremely stony loam (SoC), 8-15%, and from 800-4000' or from the river is Rock outcrop-Oquaqa associations RoF), very steep.

Climate of the area is classified as temperate. Due to the exceedingly variable nature of the terrain, the microclimate of a particular site is greatly influenced by its slope and aspect. The area has been subjected to a number of disturbances in the past, including clearing of pasture, disturbance from the mining activity, and possible fires.

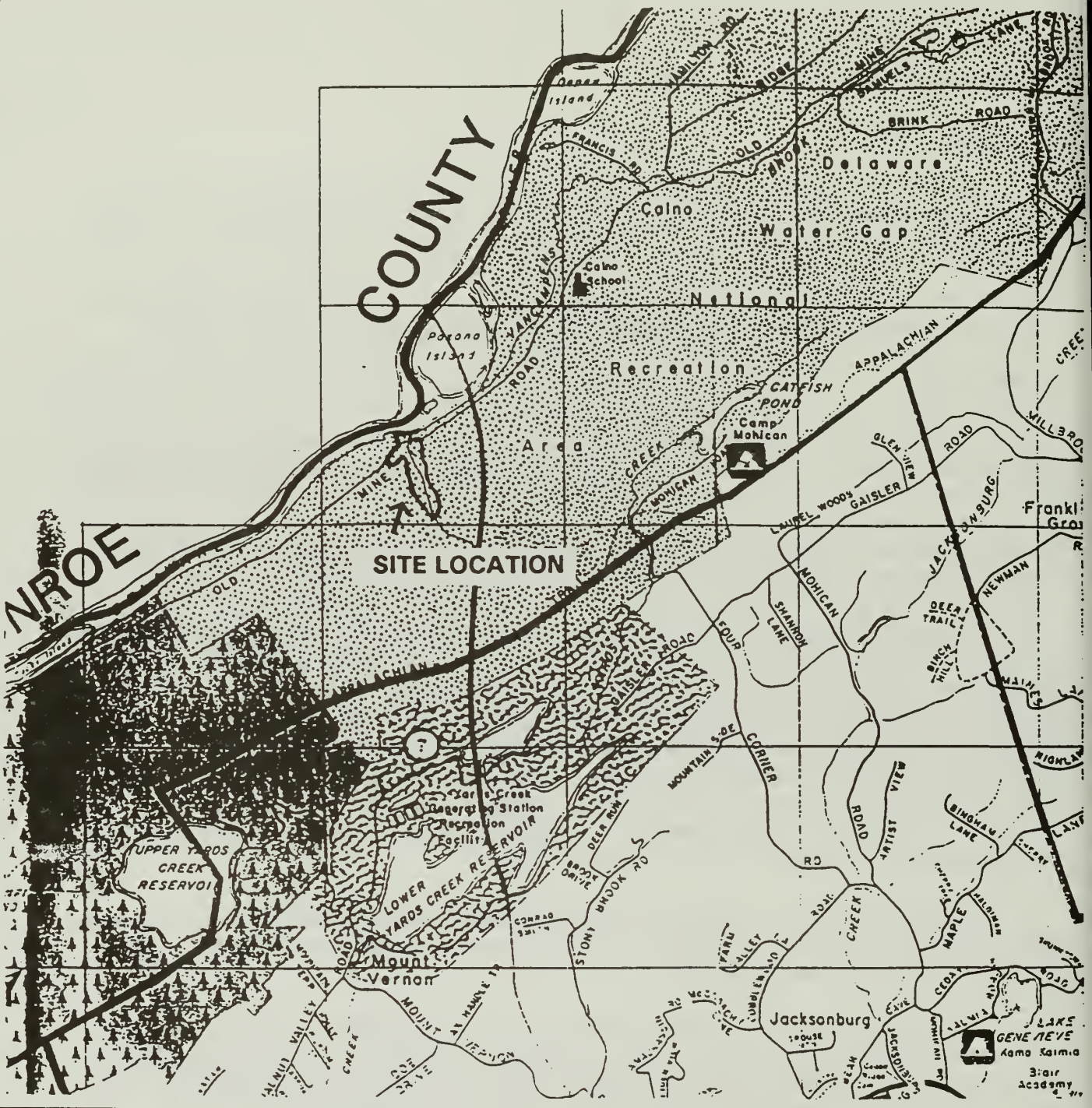

SOURCE: Alfred B. Patton's Map of Warren County

SCALE: 1" = 4000'

N

FIGURE 1
Site Location Map
Pahaquarry Copper Mines
Pahaquarry Township
Warren County
New Jersey

2 Research Way
Princeton, NJ

COASTAL
ENVIRONMENTAL SERVICES INC

1099 Winterson
Linthicum, MD

SOURCE:
USGS 7.5 Minute Topographic Series
Bushkill, Pennsylvania-New Jersey
Quadrangle

SCALE: 1" = 2000'

N

FIGURE 2
USGS Topographic Map
Pahaquarry Copper Mines
Pahaquarry Township
Warren County, New Jersey

2 Research Way
Princeton, NJ

COASTAL
ENVIRONMENTAL SERVICES INC

1099 Winterson
Linthicum, MD

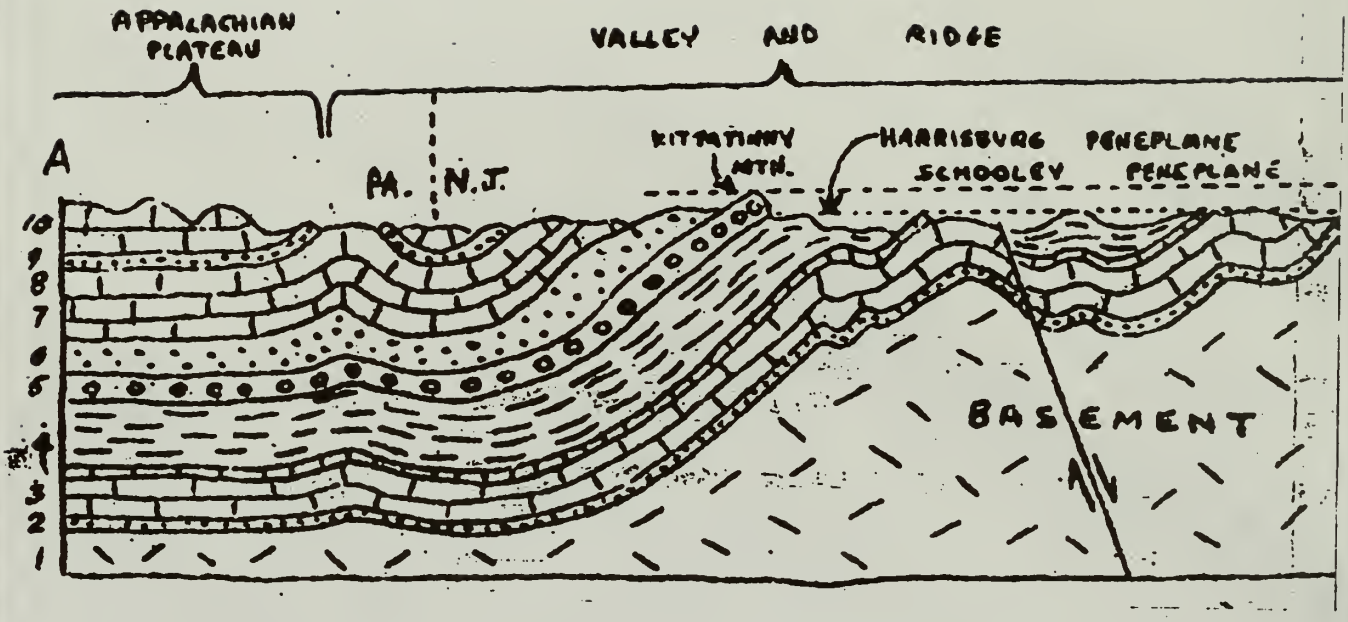

LEGEND:

10-Marcellus shale limestone
9-Oriskany sandstone
8-Holderberg limestone
7-Cayugan limestone
6-High Falls sandstone shales
5-Green Pond conglomerate
4-Martinsburg shale
Jacksonburg limestone
3-Kittatinny limestone
2-Hardyston quartzite
1-Basement composed of igneous and metamorphic rocks

FIGURE 3
GEOLOGIC PROFILE
Pahaquarry Copper Mines
Pahaquarry Township
Warren County, New Jersey

2 Research Way
Princeton, NJ
COASTAL
ENVIRONMENTAL SERVICES INC
1099 Winterson
Linthicum, MD

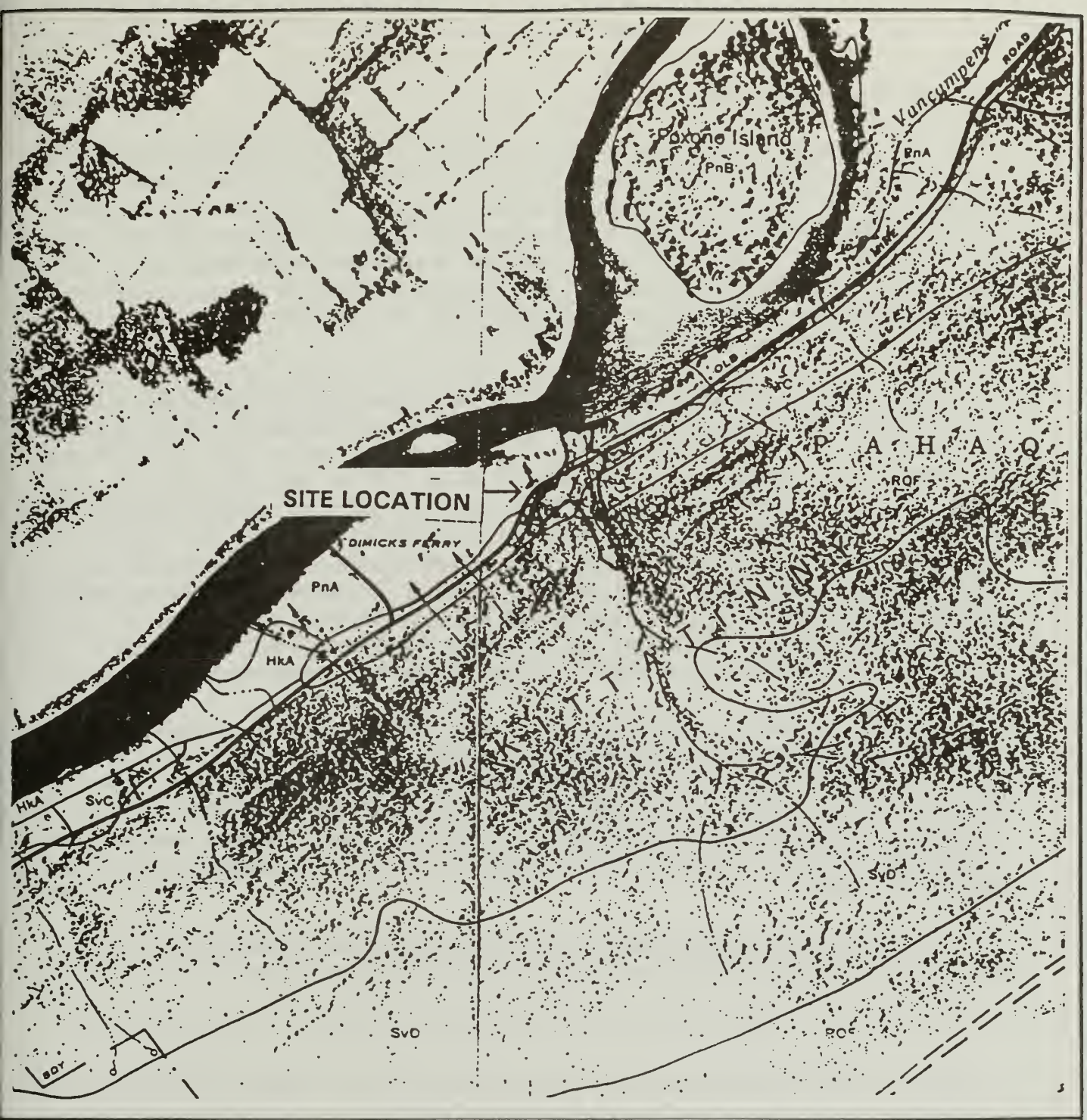

SOURCE: USDA Warren County New Jersey, Soil Survey, Atlas sheet 2

LEGEND:

HfC-Hazen gravelly loam 8-15% slopes

PnA-Pope fine sandy loam, high bottom 0-3% slopes

RoF-Rock outcrop-Oquaga association, very steep

SxC-Swartswood-Oquaga extremely stony loams 8-15% slopes

SCALE: 1" = 1320'

N

FIGURE 4

SOILS MAP

Pahaquarry Copper Mines
Pahaquarry Township
Warren County, New Jersey

2 Research Way
Princeton, NJ

COASTAL
ENVIRONMENTAL SERVICES INC

1099 Winterson
Linthicum, MD

what

B. Regional Forest Context

The Pahaquarry Site is located within the Delaware Water Gap Recreational Area (see Figures 1 and 2) within the predominantly broadleaf-deciduous forest classified by Braun (1950) as the oak-chestnut forest region of northern New Jersey. Others (Bray, 1930; Nichols, 1935; Lull, 1968; and Kuchler, 1964) refer to this area as a transition between oak-forest to the south and hemlock-pine-northern hardwood forest to the north. Robichaud, B. (1973) differentiates between would have been the climax forest type in this area without the interference of man (mixed oak forest) and what the prevailing forest types are today (sugar maple-mixed hardwoods).

Before the early 1900's, this forest was dominated by American chestnut, until it was decimated by the chestnut blight. This upland forest is dominated by white oak, red oak, and black oak in varying proportions. Both the chestnut oak and the scarlet oak are also present. This forest canopy ranges from 60 to 100 feet tall. Other canopy trees present include hickories, red maple, sugar maple, ash, tulip tree, beech, black cherry, sweet birch, black gum, and elm. Below the upper canopy layer is a second group of understory trees at a height of 30 to 40 feet. These include dogwood, hop hornbeam, sassafras, ironwood, and American chestnut sprouts. The shrub layer includes maple-leaved viburnum, black haw, arrowwood, spicebush, witch hazel, beaked hazel, and red and gray dogwoods. In acid soil areas, blueberries, huckleberry, and pinxter flower are found. Vines include poison ivy, Virginia creeper, Japanese honeysuckle, and wild grape.

In the dry ridgetops, the chestnut oak forest can be found. In some ridgetops of the higher elevations (such as along the top of Kittatinny Mountain) a pine-scrub oak forest can be found. In wetlands, lowlands and in floodplains, forests are dominated by yellow birch, red maple, ash, basswood, tulip tree and black gum. Box elder and riverbirch are also found in the floodplains. Common shrubs include alder, willow, buttonbush, spicebush and witch hazel. Herbs include skunk cabbage, spring herbs, sedges and mosses.

Hemlocks dominate steep ravines and north facing slopes in association with black birch, red maple, and sugar maple, and, to a lesser extent, white ash.

II. METHODS

A. Aerial Photo Interpretation

Coastal, in cooperation with the National Park Service, generated a detailed vegetation map, along with a vegetation and soil profile of the study area. The immediate goal of this project was to create a detailed-scale (1" = 100') vegetation map that accurately depicts and provides information about the various vegetative communities found in the study area. In order to do this, a hierarchical vegetation classification system was first developed for the study area. A 1"=100' scale black and white aerial photograph supplied by the NPS was used in conjunction with color aerial photography. A stratified sampling scheme was developed to provide detailed precision ground truthing. Utilizing this information, the detailed vegetation maps were checked and updated.

B. Sampling Design

In order to gain the maximum information out of a limited number of samples, a stratified, preferential sampling scheme was used to ground-truth the vegetation map. Preferential sampling is a method used most frequently by plant ecologists (especially the Europeans) in which sample sites that appear to be homogenous are selected and distributed among the community types equitably.

The initial quadrats were placed under a stratified sampling scheme. Several studies have classified the forest of this area on the basis of differences in topography, soils and microclimate. Geological differences, mostly in their effect on soils, and exposure induced differences have been shown to significantly effect forest composition (Balter and Loeb, 1983; Canton, 1953). Based on these previous studies, the samples taken for the Pahaquarry Vegetation Mapping were stratified by topography and microclimate.

First the watershed was divided into three elevational strata: 300-500 feet, 501-700 feet, and 701-900 ft. Then they were stratified by the three major slope faces (northwest, east, and west facing slopes). Since the area is on the northwest facing side of Kittatinny Mountain, most samples needed to be northwest-facing. There were no south facing slopes sampled. Thus, the area was stratified into nine sections in which sampling units were placed. Within each section, a tenth-hectare quadrat was located. Three additional quadrats were located in the northwest-facing area, bringing the total number of quadrats to 12.

In order to understand the effect of slope and elevation on the vegetation, most of the northwest-facing slope quadrats were established along one major transect line running perpendicular to the contours, starting at the lower elevation of the site and ending at the top elevation. These data were used to construct a vegetation profile (Figure

5). Within this overall sampling scheme, an attempt was made to place samples within a "core" study area designated by the National Park Service, which is shown on the Vegetation Map (Figure 6).

These plots are drawn to scale and their approximate location shown on the Vegetation Map. The transect A-A' is also shown on the vegetation map. There were a total of 12 sampling quadrats (labeled Q-1 through Q-12). All were tenth-hectare quadrats, except for quadrats 11 and 12, which were 1/20 hectare. The tenth-hectare quadrats are 50 meters by 20 meters, or .1 hectare (about .25 acres) in size. This represented an approximately 2% sample of the study area. On a previous (wetland) study, Coastal had taken smaller vegetation samples which have been utilized to supplement these more detailed larger quadrats.

For each plot, elevation was determined from the topographic map, azimuth determined by compass reading, and percent slope was determined using an abney level. Information collected at each Quadrat is shown in Appendices A and B. Using azimuth and percent slope, a radiation index (annual potential direct solar radiation) was calculated for each plot (Table 1), using the tables of Frank and Lee (1966).

Table 1. Slope, Aspect and Radiation Index

PARAMETER	Q1	Q2	Q3	Q4	Q5	Q6	Q7	Q8	Q9	Q10	Q11	Q12
Community	CO	MO	H/MH/R	H/CO	BB/MH	MH/R	MO	CO/R	MH/R	MO	BB/	H/M
Elevation	670	755	490	550	470	460	852	850	395	810	775	700
Slope	55%	0	68	76	2	82	8	17	11	15	20%	45
Aspect	N30°W	---	W	N-W	---	E	N-W	N-W	N	N-W	W	N60W
Radiation	28	48	47	24	48	47	47	44	45	45	48	41

			Mixed Hardwoods	Bl. Birch Mixed Hardwoods	Hemlock Mixed Hardwoods	Hemlock / Chestnut Oak	Chestnut Oak	Mixed Oak	Bare Rock	Pitch Pine	Mixed Oak	Chestnut Oak Rhododendron
	# Species			34		32	6	9			7	9
	Basal Area			1,194		1,656	2,086	2,010			1,273	2,783
	Species Diversity	Shannon		.548		.58	.631	.696			.775	.675
		Simpson		.647		.66	.699	.701			.795	.72
			MH	BB/MH	H/MH	H/CO	CO	MO	BR	P	MO	CO/R
	Scale in Feet											
% BASAL AREA OF MAJOR SPECIES				Black Birch; Red Oak		Hemlock	Chestnut Oak	Black Birch/Red Oak			Chestnut Oak; Red Oak; Hemlock/Black Birch	Rhododendron
SOIL	Matter		A	4.4		3.3	2.1	4.0			-	-
			B	1.0		-	-	-			(2.7%)	(3.1%)
	CEC (%H)		A	6.9 (99.0%)		9.6 (97.1%)	7.3 (94.6%)	11.5 (96.0%)			-	-
			B	2.4 (87.1%)		-	-	-			11.9 (98.2%)	9.1 (96.6%)
	p.h.		A	4.7		4.5	4.7	4.3			-	-
			B	4.8		-	-	-			4.2	4.3
	Nutrients (ppm)	P		46 (34)		15	56	24			(6)	(19)
		K		26 (17)		27	32	42			(25)	(35)
		Mg		20 (8)		7	13	24			(7)	(9)
		CA		50 (40)		30	40	30			(20)	(30)
	Soil Depth			D: 13.5"		Depth: 13"	Soil Depth: 21"	Soil Depth: 7"			Soil Depth: 24"	D: 25"
	TEXTURE	A	(0-8)	Slt Loam	A	Slt Loam (0-13)	Slt Loam (0-21)	Shaly Slt Loam (0-7)			A= (0-2) Slt Loam	(0-5) Loam
		B	(8-13.5)	Heavy Slt Loam	B	-	-	-			B= (2-24) Heavy Sandy Loam	(5-25) Heavy Sandy Loam

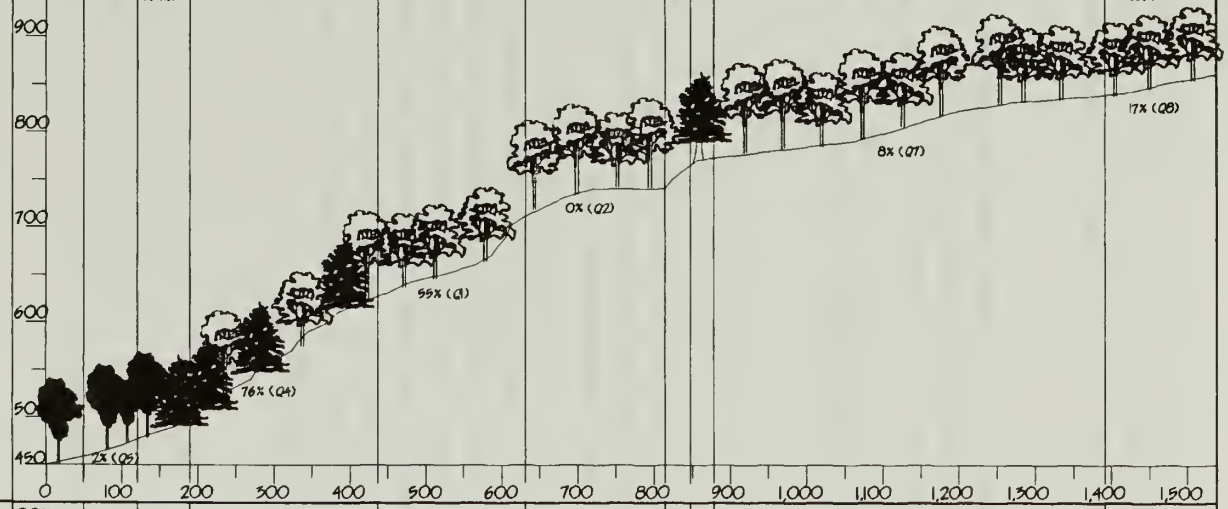

OWNER

DELAWARE WATER GAP NATIONAL RECREATION AREA

National Park Service
Denver Service Center
12795 West Alameda Parkway
P.O. Box 25287
Denver, CO 80225-0287

PROJECT TITLE

VEGETATION IDENTIFICATION AND ANALYSIS

Pahaquarry Copper Mine Site
Pahaquarry Township
Warren County, NJ

DRAWING TITLE

FIGURE 5: PAHAQUARRY VEGETATION PROFILE

PREPARED BY

COASTAL

2 Research Way, Princeton, NJ 08540

CONTRACT NO. CX-2000-1-0018 95-45214

SCALE 1" = 200'

SHEET NO. 1 OF 1 SHEETS

DATE January 1994

C. Field and Laboratory Procedures

1.0 Soils

Soil samples were collected from the A and B horizons down to the depth of refusal and were classified in the field for texture. Soil samples were collected and composited for laboratory analysis at all plots along the A-A' transect. They were sent to a laboratory and analyzed for organic matter, CEC, and nutrients.

2.0 Vegetation

Much American work uses tenth-hectare (50 X 20 m) standard samples (Whittaker, 1978). To allow the vegetation data collected at Pahaquarry to be compared to other vegetation studies, a standard community sampling procedure for tenth-hectare quadrats was followed in our data collection.

Trees were tallied by species and diameter at breast height (permitting calculations of basal areas) and shrubs by diameter at the base. For the herbs and low shrubs, cover estimates were recorded in 25 quadrats of 1 m^2 placed along the sample midline or randomly in its area. Diameter at breast height was determined for all stems greater than .5 inches, including standing dead stems. Trees under 1 inch were listed as saplings.

D. Data Analysis

A direct gradient analysis approach was used in analyzing the vegetation and environmental information collected. This approach is useful in understanding how the distribution of vegetation varies along major environmental gradients. This particular analysis makes the assumption that vegetation species are individualistic in their responses to the environmental gradients and that plant communities form a vegetational continuum. The community terms such as "chestnut oak forest" or "hemlock/ mixed hardwoods" are useful for descriptive purposes, but it is recognized that some stands are borderline in the continuum between these types; therefore, their assignment to a given type is partly arbitrary. It may also be noted that most species have one optimum location along a particular environmental gradient and decline to either side. Most responses are approximately bell shaped, or gaussian.

Direct gradient analysis can be used to determine:

1. What environmental factor principally affects the distribution of plants.

2. How environmental factors can best be measured.

3. What additional, secondary, environmental gradients affect community distribution.

4. What the best method is for combining individual species into communities.

Since resources were not available for a full gradient analysis approach, ordination, classification and an informal gradient analysis were utilized to answer these questions. Appendix A shows the basic vegetation data of all 12 quadrats. Individual tree counts for each species and for each diameter size class were recorded. The total for each species was computed and a total number of species for each quadrat tallied. This number of species in each quadrat is a simple measure of species diversity, usually called species **abundance**. This number is indicated in the second row of the vegetation profile (Figure 5) under each forest community and shown in Table 2.

Basal area was calculated in order to obtain an estimate of vegetative cover. Cover is defined as the crown or shoot area of a species and is expressed as a fraction or percentage of the reference area. Instead of crown area, cover may also imply the projection of the basal area to the ground surface. The basal area is the area outline of a plant near the ground surface. In trees it is calculated by measuring through the diameter of a plant, usually at breast height (DBH) (i.e., 1.5 m above the ground), using the formula Basal Area = πr^2, where r equals 1/2 dbh. This breast height measurement is acceptable as a basal area measurement in most temperate tree stands (Mueller, Dombois, 1974). Cover as a measure of plant distribution has been emphasized as being of greater ecological significance than density. This idea is based on the observation that cover gives a better measure of plant biomass than does the number of individuals. Utilizing this basal area formula, the basal area of each species, the mean basal area of each species and the total basal area for each quadrat were calculated (see Appendix A).

It is valuable to establish which species have the greatest "importance" in a community, although this measure depends on which values the investigator feels is of most significance to a particular species or group of species. It has become standard practice to utilize a composite importance value developed by Curtis (1956). This importance value (IV) is defined as the sum of relative density, relative frequency and relative dominance. These values were calculated for each species. Tables showing relative density, species dominance, relative dominance, species frequency, relative frequency and final calculated importance value can be found in Appendix C.

Importance Value (IV):

1. Relative Density (RD): Number of individuals of species/total number of individuals x 100

2. Relative Dominance (RDO): Dominance of a species/dominance of all species x 100

3. Species Dominance: Mean basal area (ba) per tree x number of trees in a species

4. Relative Frequency (RF): Frequency of a species/sum frequency of all species x 100

5. Species Frequency: Number of points (quadrats) with species/total points x 100

IV = RD + RDO + RF

Two measures of diversity were also calculated for each quadrat: the Shannon Index, and the Simpson Index. In both cases, a high value indicates greater density (Table 2, below). Finally, as a measure of similarity, percent similarity and the Jaccaro coefficient were calculated for the quadrats along the A-A' transect. These coefficients are shown in Appendix F.

TABLE 2.	SUMMARY OF VEGATATION INDICES											
QUADRAT	1	2	3	4	5	6	7	8	9	10	11	12
# of Individuals	107	94	125	63	34	53	30.5	153	69	40	474	84
# of Species (Abundance)	6	10	7	5	5	8	7	10	12	9	7	6
Basal Area	2086.02	2010.62	2095.45	1655.62	1193.81	668.375	1272.74	2783.46	886.717	1027.3	1591.22	937.768
Mean Basal Area	89.81	140.61	134.2	108.46	153.09	120.21	315.27	117.21	222.62	157.21	164.42	152.08
DIVERSITY												
Shannon	0.631	0.696	0.713	0.58	0.548	0.623	0.775	0.673	0.911	0.792	0.132	0.635
Simpson	0.699	0.701	0.781	0.66	0.647	0.686	0.793	0.72	0.843	0.795	0.112	0.72

III. RESULTS

A. Soils

Based on the soil samples obtained in the field, the site consists of silt loams and shaly silt loams in the A horizon and heavy sandy loams and heavy silty loams in the B horizon. Soil thickness varies from 7 inches to 24 inches. Rock outcrops frequently occur along ridges and on steep slopes. Table 3 summarizes the soil field samples.

Table 3. Soil Data

Quadrat	Soil Horizon	Depth (inches)	Soil Texture	Notes
1	A	0-21	Silt loam	2" root mat on surface Soil moisture content near saturation @ 18"
2	A	0-7	Shaly silt loam	Very stony surface
4	A	0-13	Silt loam	1" organic mat on surface
5	A B	0-8 8-13.5	Silt loam Heavy silt loam	2" organic mat
8	A	0-2 2-24	Silt loam Heavy sandy loam	
8	A	0-5 5-23	Loam Heavy sandy loam	

A review of the soil fertility analyses submitted for the Pahaquarry Mine site does not indicate considerable variation among quadrats. The soil pH across the sites was rather low, ranging from 4.2 to 4.8. In addition, the majority of the Cation Exchange Capacity was occupied by hydrogen. This is not unexpected, given the overall low soil pH levels. A review of the individual nutrient analysis for potassium, magnesium and calcium generally indicated these nutrient levels to be rather low, with some variation among sampling points. There was more variation noted in the phosphorus levels, with a range of 6 ppm to 56 ppm. However, these levels could not be correlated with changes in vegetational communities. Similarly, the organic matter levels present could also not be correlated with changes in the communities. The greatest organic matter level was recorded at Quadrat #5, located at the base of the slope. This would be anticipated since this is generally the flattest area, and receives depositional material from upslope.

The limited fertility testing did not reveal much variation that could explain the noted changes in vegetational communities. The fertility status of all the sites was generally low. Soil analysis results can be found in Appendix E.

B. Species-Environmental Relationships

Comparisons between site factors and measures of species distribution were examined. Measures examined included abundance, basal area, importance value, and diversity.

1.0 Abundance

Table 4 below indicates that species abundance on the north west slope of the Pahaquarry site decreases with increasing elevation.

Table 4. Species Abundance Along an Elevation Gradient

Elevation	Community	No. of Species
470	Black Birch-Mixed Hardwoods (BB/MH)	34
550	Hemlock-Chestnut Oak (H/CO)	32
670	Chestnut Oak (CO)	6
755	Mixed Oak (MO) (ridge)	9
850	Mixed Oak (MO)	7
850	Mixed Oak-Rhododendron (MO/R)	9

Table 5 shows this abundance data (the number of individuals) for each species in all quadrats.

TABLE 5. SPECIES ABUNDANCE

NUMBER OF INDIVIDUALS

Quadrat	1	2	3	4	5	6	7	8	9	10	11	12	TOTAL INDIVIDUALS
Acer negundo									4				4
Acer pennsylvanica	0	0				2			5				7
Acer rubrum	18	6	9				6	31				4	74
Acer sacharum	0	3		3	7	1	6	1	2				23
Amelanchier arborea	3	0		7		1	2	2		1			16
Betula lenta	11	12	27	2	18	20		1	6	4	442		543
Betula nigra									15				15
Betula populifolia										2			2
Carya glabra	0	5						1		2			8
Cornus florida										2		2	4
Fagus grandifolia	0	0			5								5
Fraxinus americana	0	1							1				2
Hamamelis virginiana	0	0	2						2				4
Juniperous virginiana	0	1											1
Kalmia latifolia							2	15					17
Liriodendron tulipifera									2	1			3
Nyssa sylvatica							2				4		6
Pinus rigida											2		2
Prunus serotina	0	8											8
Quercus alba										5			5
Quercus marilandica										4			4
Quercus prinus	52	47	15	16		19	11	23		13	12	14	222
Quercus rubra	8	10	3	3	3	3	3	9		11	6	14	73
Rhododendron maximum	0		35			3		69	18			42	167
Sassafras albidum							1	1					2
Tilia americana									1				1
Tsuga canadensis	15	0	34	32	1	1			3		6	20	112
Ulmus rubra									10				10
													0
Total # of Individuals	107	93	125	63	34	50	32	153	55	45	472	96	1325

2.0 Basal Area

Basal area and elevation were also compared. Basal areas are listed on the vegetation profile (Figure 5) and are listed in ascending order of elevation in Table 6 below:

Table 6. Basal Area along an elevational gradient

Elevation	Community	Basal Area
470	Black Birch-Mixed Hardwoods (BB/MH)	1,194
550	Hemlock-Chestnut Oak (H/CO)	1,656
670	Chestnut Oak (CO)	2,086
755	Mixed Oak (MO) (ridge)	2,010
850	Mixed Oak (MO)	1,273
850	Mixed Oak-Rhododendron (MO/R)	2,783

3.0 Importance Value

Table 7, below, lists the major species of importance on the site in decreasing order of importance value. The chestnut oak had the highest importance value for all the quadrats.

Table 7. Importance Value of Major Species

Species	Importance Value	Importance Percentage
Quercus prinus	.56	18.58%
Betula lenta	.53	17.64%
Rhododendron maximum	.30	10.11%
Tsuga canadensis	.28	9.73%
Quercus rubra	.28	9.26%
Acer rubrum	.19	6.24%
Acer saccharum	.16	5.45%
Amelancier arborea	.10	3.49%

4.0 Diversity

Species diversity per quadrat (see Table 8) did not change significantly with elevational gradient. The biggest differences were the low diversity ~~indices found~~ in the Hemlock-Chestnut Oak Association.

Table 8. Abundance and Diversity along an Elevation Gradient

Elevation	Community	Shannon Index	Simpson Index	No. of Species
470	Black Birch-Mixed Hardwoods (BB/MH)	548	647	34
550	Hemlock-Chestnut Oak (H/CO)	58	66	32
670	Chestnut Oak (CO)	631	699	6
755	Mixed Oak (MO) (ridge)	696	701	9
850	Mixed Oak (M0)	775	795	7
850	Mixed Oak-Rhododendron (MO/R)	673	720	9

IV. DISCUSSION

A. Vegetation Structure

The communities on the site differ less in overall basal area then they do in seral stage and vegetation structure. The mixed oak and hemlock communities have fewer numbers of larger stems, while the birch communities have greater number of smaller stems indicative of second growth forests. The mixed oak community above the ridge (Q7) shows a very evenly spread distribution of size classes, from 2 inch diameters up to 19 inch diameters. In contrast to this, 90% of the black birch community at approximately the same elevation had stems smaller than 4 inches in diameter.

Secondary succession following logging and fire usually involves less complete sequences of life forms, as noted in a number of the communities found on the site. These forest associations would be expected to be part of the same topographic habitat type, yet they exhibit very significant differences in species composition and vegetative structure. These differences are primarily caused by past disturbances resulting in secondary succession.

B. Species-Environmental Relationships

Soils within the site did not appear to exhibit significant differences among samples. Generally, however, soil pH through the site was low (4.3-4.8) which would have a noticeable effect on species composition. In this study area Acer rubrum, Betula lenta, Quercus prinus and Quercus rubra were directly associated with lower pH values and higher values of iron, aluminum, organic matter and sand. These species all appeared to have relatively high importance value in the study area; therefore, the predominance of these species appears to be related to soil pH and nutrient status.

Hemlock, on the other hand does not appear to be associated with particular soil textures or nutrient status. Hemlock appears mostly to be limited to cool and moist north-facing slopes independent of underlying bedrock. Most of the hemlocks on the Pahaquarry site are located in the cool, moist ravine around Mine Brook. The band of hemlocks along the north-west facing slope was the only Hemlock association not related to the ravine. This particular association is found on a very steep slope (76%) with a north west aspect, which receives very little light. In fact, an examination of the radiation index values for the region (Frank and Lee, 1966) shows the annual potential direct solar radiation to be very low and about one-half the value (24) of the other vegetation associations (44-48). It appears that this particular association is limited by low light, which causes this microclimate to remain cool and moist. Moisture from the Delaware River may also contribute to the microclimatic condition.

Low pH interferes with the functioning of decay organisms, allowing higher concentrations of organic matter to build up. Based on this, one might expect organic

matter to be in the 5-6% range. Instead, it ranges (in the A horizon) from 2.1 to 4.4% in the samples analyzed. This lower than expected concentration of organic matter could be due to the steep slopes and to past site disturbances.

C. Vegetation Associations Within the Study Area

1. Mixed Oak Associations

1.1 Mixed Oak Forest (MO)

The mixed oak association is largely a chestnut oak/red oak association. This is the most predominant association on the site and occupies most of the site above the 750-900' contour. This association can be found from completely flat slopes (Q2) to moderate slopes of 10% (Q7) to 15% (Q10), and is generally found on northwest-facing slopes. Exposure tends to be moderate, with low to moderate disturbance. Position is often mid to uppermost slope.

The dominant species of this association are chestnut oak (*Quercus prinus*), 34-57 %, red oak (*Quercus rubra*), 13-33%, and, occasionally, white oak (Quercus alba), 0 to 23%. Sweet birch (*Betula lenta*), 13%, and black cherry (*Prunus serotina*), 11%, are often codominants. Other trees include hemlock, red maple, white ash (*Fraxinus americana*), sweet pignut hickory (*Carya glabra*), and downy service-berry (*Amelanchier arborea*). Saplings include hemlock, eastern red cedar (*Juniperous virginiana*), and eastern white pine (*Pinus strobus*). Vegetation composition is represented by Quadrats #2, #7 and #10.

Soils can be very shallow (7") to moderately deep (24") for this association. Silt loams dominate the 'A' horizon, with heavy sandy loams found in the 'B' horizon. The umber of individuals is moderate (30-140), the measure of abundance (number of species) is moderate to high (7-10), and basal area is also moderate to high (1273-2010 sq. in./quadrat). Diversity is high (.696 - .701 (Simpson)/.775 - .793 (Shannon)).

The high diversity and lower number of individuals shows this association to be relatively mature and undisturbed. This association is the closest to the oak-chestnut forest region of northern New Jersey (Braun, 1950).

1.2 Mixed Oak/Kalmia (MO/K)

This association is the same as the Mixed Oak association above except that it contains significant amounts of mountain laurel (Kalmia latifolia) in the shrub layer.

1.3 Chestnut Oak Forest (CO)

The Chestnut Oak Forest is a common community along dry ridgetops of higher elevations in northern New Jersey. At the Pahaquarry site, this association can be seen along the Kaiser trail. It tends to be found between elevations of 600-750′ on steep slopes (50-60%) and on northwest facing slopes which are moderately exposed with only slight disturbance. Quadrat #1 is representative of this association. The dominant species is chestnut oak (Quercus prinus), which accounts for about 70% of the basal area of the association. Other trees in the canopy include red oak (*Quercus rubra*) and Sweet birch (*Betula lenta*). Red maple (*Acer rubrum*) and Hemlock (*Tsuga canadensis*) are also present in small numbers. The shrub layer is dominated by lowbush blueberry (*Vaccinium angustifolium*) and highbush blueberry (*Vaccinium corymbosum*). Very little herbaceous layer exists, other than various grasses. Soil depth is relatively shallow (21") and soil texture is mostly silt loam.

The number of individuals (107/quadrat) is high, while abundance (number of species) is moderate for the site (6). The overall basal area (2086 sq. in./quadrat) is high with relatively high diversity (.631/.699). This indicates that it is a relatively mature association with minimal disturbance in the recent past.

1.4 Chestnut Oak/Rhododendron (CO/R)

This chestnut oak/rhododendron association is located above the first steep ridge of the core area at elevations of 840-860′. Slope is about 17% and aspect is north/west. This association is represented by data collected in Quadrat #8. The dominant tree is chestnut oak (*Quercus prinus*), 34%, and the dominant shrub is rhododendron, accounting for 30% of the basal area.

Basal area of this association was the highest of all associations found on the site (2783 sq. in. quadrat). Abundance was high (10) and diversity average (.673/.721).

1.5 Mixed Hardwood/Rhododendron (MH/R)

This association varies from a riverine wet community consisting of black birch/elm and rhododendron along the stream, to black birch, chestnut oak and rhododendron located within the stream ravine but away from the stream itself and up the eastern facing slopes. It is found at midslope elevations of 350-530′ and can range from relatively flat slopes (11%) to extremely steep slopes (82%). The slope faces north along the river itself and east to north-east at higher elevations. These associations have well protected exposure. Most of the community has been heavily disturbed and could be classed as a young second growth forest.

The dominant tree species are sweet birch (*Betula lenta*), 20-31%, and chestnut oak (*Quercus prinus*), 0-25%. Slippery elm (Ulmus rubra), 0-14%, and river birch (Betula nigra)l, 0-11%, are found along the stream. Red oak is also a significant co-dominant (14.5%). Other trees include striped maple (*Acer pennsylvanicum*), red maple, downy service-berry, and hemlock. Quadrats #6 and #9 represent the community data.

The main shrub is rhododendron, which accounts for 15 - 21% of the total basal area of the association. Herbaceous plants include sub-arctic lady fern (*Athyrium filix-femina*) and sweet birch seedlings.

The number of individuals is average (53) with an average number of species (8). The basal area (668 sq. in./quadrat) is the lowest of any association sampled. Diversity is about average (.623/.686). This association appears to be largely a product of the extremely steep slope, making this association susceptible to wind and storm damage, keeping it in an earlier successional stage and keeping the basal area and biomass very low.

2.0 Hemlock Association

2.1 Hemlock/Mixed Hardwood/Rhododendron (H/MH/R)

This hemlock/chestnut oak/rhododendron association dominates much of the ravine at the Pahaquarry site and is found at elevations of 440-750' on steep to very steep slopes (45-68%). It is found on west to northwest facing aspects, on either well protected ravines or moderately exposed slopes. Disturbance ranges from slight disturbance to moderate or heavy in some cases (Q3) due to mine shaft spoil and rock slides.

Dominant species are hemlock (*Tsuga canadensis*), 30-35%, chestnut oak (*Quercus prinus*), 20-27%, sweet birch (*Betula lenta*), 20%, and, in some cases, red oak (Quercus rubra), 0-22%. Shrubs include rosebay rhododendron (*Rhododendron maximum)*, which accounts for 10 to 16% by total basal area of the entire association, American witch hazel *(Hamamelis virginiana*), and lowbush blueberry. Typical vegetation composition is represented by data from Quadrats #3 and #12. Total individuals (125) is very high with moderate abundance (7). Basal area is high (2095 sq. in./quadrat) and diversity is high (.713/.781).

This association covers much of the Pahaquarry ravine and is therefore found in areas of little to extensive disturbance. Most of the disturbance is a direct result of the copper mining activity that occurred in the study area and is either from direct mining, spoil piles and rock slides, or mining road construction.

2.2 Hemlock/Mixed Hardwood (H/MH)

This Hemlock/Mixed hardwood association is essentially the same as the hemlock/mixed hardwood/rhododendron association described above, except that it lacks the rhododendron shrub layer.

2.3 Hemlock/Chestnut Oak (H/CO)

The hemlock/chestnut oak association, unlike most of the hemlock in the study area, is not associated with the ravines. Instead, is it located from elevations of 530-565' on very steep (76%) northwest facing slopes. This association is a linear strip along the north side of Kittatinny on the Pahaquarry site. It tends to have moderate exposure and the disturbance is slight. The two dominant species are hemlock (*Tsuga canadensis*), 47%, and chestnut oak (*Quercus prinus*), 45%. Other trees include sugar maple, sweet birch, northern red oak, eastern hemlock, and red maple. The only significant shrub is downy service-berry. The herbaceous layer includes grass species, cinnamon fern (*Osmunda cinnamonea*), and christmas fern (*Polystichum acrostichoides*). Typical vegetative composition is represented by Quadrat #4.

Soils are silt loams to refusal at 13". The number of individuals is relatively low (63) and abundance is low. Basal area is moderate (1655 sq. in./quadrat) and diversity is low (.58/.66).

The low indicators imply that this community is most likely being limited by low soil moisture due to thin soils and steep slopes, and by low light resulting from a combination of northwest facing aspect and steep slopes.

3.0 Black Birch Association

3.1 Black Birch/Mixed Hardwood (BB/MH)

The black birch/mixed hardwood association appears to be a second growth forest association formed directly as a result of some significant disturbance. Found at a few different elevations on the site, it is mostly between elevations of 465 to 800', on flat or western facing slopes. In the study area, this association appeared mostly on relatively flat to moderately steep slopes (2%-20%) with moderate exposure. The heavy disturbance in these areas appear to be from selective or clear cutting in the recent past. One area (Q11) appeared to have been disturbed by fire.

The dominant species are black birch (*Betula lenta*), 64-73%, sugar maple (*Acer saccharum*), 17%, chestnut oak (Quercus prinus), 0-15%, and red oak (*Quercus rubra*), 11%. Other trees include red maple, American beech, and hemlock. Typical vegetative composition is represented by Quadrats #5 and #11.

Soils are shallow (13.5') with silt loams in the 'A' horizon and heavy silt loams in the 'B' horizon. Number of individuals (34) and abundance (5) are both low. Basal area is average (1193 sq. in./quadrat), as is diversity (.548/.647).

3.2 Mixed Birch/Rhododendron (BB/MH)

This association is very similar to the black birch/mixed hardwood, except that it has a lower percentage of black birch and contains rhododendron in the understory.

4.0 Other Associations

4.1 Pine/Oak (P/O)

Along a few of the exposed ridgetops there is a Pitch Pine-Scrub Oak forest, dominated by pitch pine (Pinus ilicifolia) and scrub oak (Quercus illicifolia).

4.2 Pine Plantation (P)

Along Old Mine Road there are a few patches of White Pine (Pinus strobus), that have been planted by the boy scouts.

4.3 Bare Rock (BR)

A few areas of the site have rock outcrops and exposed rocks where mining activity once took place.

4.4 Bare Soil (BS)

There are sections that have little to no vegetation due to past disturbance, such as trails and parking areas.

4.5 Successional/Ruderal (S/R)

This early successional and ruderal (vegetation on filled areas) association is mostly a shrub dominated association with blackberry (*Rubus allegheniensis*), black cherry saplings (*Prunus serotina*), and honeysuckle (*Lonicera spp.*). The herbaceous layer consists of goldenrod (*Solidago spp.*), hawkweed (*Hieracium spp.*), pokeweed (*Phytollacca americana*), and foxtail grass (*Setaria spp.*). This are is mainly adjacent to Old Mine Road where the old mining buildings were located. Vegetation ranges from dense vegetation and others areas that have no vegetation, such as the trails and old foundation slabs.

IV. SUMMARY

Vegetation was mapped on the Pahaquarry site and analyzed for limiting factors and environmental gradients examined. Plant cover was mapped using aerial photographs and a stratified sampling scheme was developed to provide ground truthing. 12 tenth hectare quadrants were sampled in order to collect quantitative information for the vegetation analysis. The site was stratified by elevation and slope orientation in order to best understand the environmental factors affecting the species composition and distribution on the site. The final vegetation map was produced on stable-base mylar at a scale of 1" = 100'.

The mapping indicated the that three major associations are found on the site. mixed oak associations, hemlock associations, amd black birch associations. The dominant association was a mixed oak association dominated by chestnut and red oaks. This was found on flatter slopes exposed to more light and better soil nutrients. The high species diversity and lower number of individuals shows this association to be relatively mature undisturbed association within the recent past. This association appears the closest to the oak-chestnut forest region of northern New Jersey by Braun (1950). Most of the other oak associations varied in terms of shifting of relative densities, frequency, and cover of the species.

The second most significant association is the hemlock/chestnut oak/rhododendron association which dominates much of the ravine at the Pahaquarry site. This association covers much of the Pahaquarry ravine and is therefore if found in areas of little to extensive disturbance. Since both the basal area and diversity of this association is high, it appears that this community is a stable community that occupies the ravines due to exposure and moisture conditions. It is here despite some of the disturbance and not as a result of the disturbance. Most of the disturbance appears to be a direct result of the copper mining activity that occurred in the study area and is either from direct mining, spoil piles and rock slides, or mining road construction. Other hemlock associations are similar in character, but vary in degree of species composition.

The final significant association is the birch/mixed hardwood association which appears to be a second growth forest association and was formed directly as a result of some significant disturbance. Basal area and diversity are low to moderate, indicating recent disturbance and a young seral stage.

The two species with the greatest importance at the Pahaquarry site are the chestnut oak and the black birch. The chestnut oak is related to mature forest associations, while the black birch is a successional species indicative of site disturbance. The high importance value of the black birch indicates that much of the site has been disturbed and much of the site's species composition has been the result of a mosaic of site disturbances.

The overall environmental factors that were examined were elevation, slope, aspect, and soils. A vegetation profile (see Figure 5) along transect A-A' was constructed

in order to examine significant environmental gradients. From this profile and other vegetation data analyses, it appeared that elevational differences and soils were most likely not a significant factor, due to their relatively small variation. The one parameter that did seem to be affected by elevation was species abundance, which decreased at higher elevations.

Analyses of soil texture and soil fertility indicated little variation among quadrats. The soil pH was low (4.2 to 4.8) and the majority of the Cation Exchange Capacity was occupied by hydrogen. Other nutrients, such as potassium, magnesium, and calcium, were also low. There was more variation noted in the phosphorus levels with a range of 6 ppm to 56 ppm. However, these levels could not be correlated well with changes in vegetational communities without extensive multivariant analysis. The greatest organic matter level was recorded at the base of the slope, which would be expected since this is generally the flattest area and receives depositional material from upslope. The limited fertility testing did not reveal much variation that would explain noted changes in vegetational communities. The fertility status of all the sites was generally low.

Exposure and slope seemed to be significant due to their effect on limiting available incident light. Both west and east facing slopes and northwest facing slopes over 50% slope contained hemlock associations. Areas with better light exposure contained broadleaf associations. Past site disturbances appeared to play a major role on the vegetation of the area. The black birch associations are found in the areas with the most disturbance. The mixed oak community appeared to be a more mature community, and the least disturbed.

BIBLIOGRAPHY

Balter, H. and Robert E. Loeb. 1983. Bulletin of the Torrey Botanical Club. Vol. 110. No. 3 pp. 370-379.

Braun, E.L. 1950. Deciduous Forest of Eastern North America. Philadelphia, PA.

Canton, J.E. 1953. Vegetation and Microclimates on North and South Slopes of Cushetunk Mountain, NJ. Ecological Monographs 23:241-270.

Frank, E.C., and R. Lee. 1966. Potential solar beam irradiation on slopes. Forest Service Research Paper RM-18, Rocky Mountain Forest and Range Experiment Station, Fort Collins, Colorado.

Kuchler, A.W. 1964. Potential Natural Vegetation of the Coterminous United States. Amer. Geography Society Special Pub. 36. New York, NY.

Robichaud, B. 1973. Vegetation of New Jersey. Rutgers University Press, New Brunswick, NJ.

Whittaker. 1978. Direct Gradient Analysis. In Ordination of Plant Communities. Ed. R.H. Whittler, pp. 7-50. The Hague.

Yolton, J. S. 1984. The Pahaquarry Copper Mines. Upsala College. East Orange,NJ

APPENDIX A

VEGETATION DATA AND ANALYSIS

Quadrat Data
List of Species
Total No. of Individual
Total No. of Species
Basal Area of each Species
Total Basal Area of Quadrat
Mean Basal Area of each Species

PAHAQUARRY VEGETATION DATA

QUADRAT 1

SPECIES	SEEDLING	SAPLING		Size classes (DBH in Inches)																								Total # Individuals	Total # Species
	0	1	1	2	3	4	5	6	7	8	9	10	11	12	13	14	15	16	17	18	19	20	21	22	23	24	25		
Amelanchier arborea	0	0		2	1																							3	1
Betula lenta	0	1					2	6		1	1																	11	1
Quercus prinus	0	0				2		11	2	4	13	4	4	6	5	1												52	1
Quercus rubra	0	0		2	1			1						1	2		1											8	1
Tsuga canadensis	14	0			1																							15	1
Acer rubrum	0	2	3	3	5	2	2	1																				18	1
Vaccinium corymbosum	0	0																										0	0
Vaccinium angustifolium	0	0																										0	0
TOTAL	4	2	3	14	24	16	20	114	14	40	126	40	44	84	91	14	15	0	0	0	0	0	0	0	0	0	0	664	107	8
																												2086.02		

	SEEDLING	SAPLING																										Sum of Diameters	Basal Areas
	0	1	1	2	3	4	5	6	7	8	9	10	11	12	13	14	15	16	17	18	19	20	21	22	23	24	25		
Amelanchier arborea	0	0	0	4	3	0	0	0	0	0	0	0	0	0	0	0	0	0	0	0	0	0	0	0	0	0	0	7	21.99
Betula lenta	0	1	0	0	0	0	10	36	0	8	9	0	0	0	0	0	0	0	0	0	0	0	0	0	0	0	0	64	199.49
Quercus prinus	0	0	0	0	0	8	0	66	14	32	117	40	44	72	65	14	0	0	0	0	0	0	0	0	0	0	0	472	1482.84
Quercus rubra	0	0	0	4	3	0	0	6	0	0	0	0	0	12	26	0	15	0	0	0	0	0	0	0	0	0	0	66	207.35
Tsuga canadensis	4	0	0	0	3	0	0	0	0	0	0	0	0	0	0	0	0	0	0	0	0	0	0	0	0	0	0	7	20.42
Acer rubrum	0	1	3	6	15	8	10	6	0	0	0	0	0	0	0	0	0	0	0	0	0	0	0	0	0	0	0	49	153.94
Vaccinium corymbosum	0	0	0	0	0	0	0	0	0	0	0	0	0	0	0	0	0	0	0	0	0	0	0	0	0	0	0	0	0.00
Vaccinium angustifolium	0	0	0	0	0	0	0	0	0	0	0	0	0	0	0	0	0	0	0	0	0	0	0	0	0	0	0	0	0.00
TOTAL		2	3	14	24	16	20	114	14	40	126	40	44	84	91	14	15	0	0	0	0	0	0	0	0	0	0	664	2086.02

	Basal Areas	Mean Basal Area
Amelanchier arborea	1.05%	7.33
Betula lenta	9.56%	18.14
Quercus prinus	71.08%	28.52
Quercus rubra	9.94%	25.92
Tsuga canadensis	0.98%	1.36
Acer rubrum	7.38%	8.55
Vaccinium corymbosum	0.00%	
Vaccinium angustifolium	0.00%	
TOTAL	100.00%	89.81

QUADRAT 2

SPECIES	SEEDLING 0.25	SAPLING 0.5	1	2	3	4	5	6	7	8	9	10	11	12	13	14	15	16	17	18	19	20	21	18	23	24	25		Total # Individuals		Total # Species
				Size classes (DBH in inches)																											
Quercus prinus	0	0		0	5	1	9	6	7	7	4	2		2	1	1	1			1									47		1
Betula lenta	0	0					1	6	1	1	2		1																12		1
Prunus serotina	0	0				0	1	0	1	0	1	4	1	0	0	0													8		1
Quercus rubra	0	0	0	0	1			0	2	3	2			1	0	1	0												10		1
Fraxinus americana	0	0	1																										1		1
Acer rubrum	0	0	1	3		1		1																					6		1
Acer sacharum	0	0		1	1	1																							3		1
Vaccinium angustifolium	0	0																											0		0
Pinus strobus	0	1																											1		1
Carya glabra	0	0		1	1			2		1																			5		1
Amelanchier arborea	0	0																											0		0
Tsuga canadensis																													0		0
Juniperus virginiana		1																											1		1
TOTAL	0	1	2	10	24	12	55	90	77	96	81	60	22	36	13	28	15	0	0	18	0	0	0	0	0	0	0	640	94		10
																												2010.624			

	SEEDLING 0.25	SAPLING 0.5	1	2	3	4	5	6	7	8	9	10	11	12	13	14	15	16	17	18	19	20	21	22	23	24	25		Sum of Diameters		Basal Areas
Quercus prinus	0	0	0	0	15	4	45	36	49	56	36	20	0	24	13	14	15	0	0	18	0	0	0	0	0	0	0		345		1083.85
Betula lenta	0	0	0	0	0	0	5	36	7	8	18	0	11	0	0	0	0	0	0	0	0	0	0	0	0	0	0		85		267.04
Prunus serotina	0	0	0	0	0	0	5	0	7	0	9	40	11	0	0	0	0	0	0	0	0	0	0	0	0	0	0		72		226.20
Quercus rubra	0	0	0	0	3	0	0	0	14	24	18	0	0	12	0	14	0	0	0	0	0	0	0	0	0	0	0		85		267.04
Fraxinus americana	0	0	1	0	0	0	0	0	0	0	0	0	0	0	0	0	0	0	0	0	0	0	0	0	0	0	0		1		3.14
Acer rubrum	0	0	1	6	0	4	0	6	0	0	0	0	0	0	0	0	0	0	0	0	0	0	0	0	0	0	0		17		53.41
Acer sacharum	0	0	0	2	3	4	0	0	0	0	0	0	0	0	0	0	0	0	0	0	0	0	0	0	0	0	0		9		28.27
Vaccinium angustifolium	0	0	0	0	0	0	0	0	0	0	0	0	0	0	0	0	0	0	0	0	0	0	0	0	0	0	0		0		0.00
Pinus strobus	0	0.5	0	0	0	0	0	0	0	0	0	0	0	0	0	0	0	0	0	0	0	0	0	0	0	0	0		0.5		1.57
Carya glabra	0	0	0	2	3	0	0	12	0	8	0	0	0	0	0	0	0	0	0	0	0	0	0	0	0	0	0		25		78.54
Amelanchier arborea	0	0	0	0	0	0	0	0	0	0	0	0	0	0	0	0	0	0	0	0	0	0	0	0	0	0	0		0		0.00
Tsuga canadensis	0	0	0	0	0	0	0	0	0	0	0	0	0	0	0	0	0	0	0	0	0	0	0	0	0	0	0		0		0.00
Juniperus virginiana	0	0.5	0	0	0	0	0	0	0	0	0	0	0	0	0	0	0	0	0	0	0	0	0	0	0	0	0		0.5		1.57
TOTAL	0	1	2	10	24	12	55	90	77	96	81	60	22	36	13	28	15	0	0	18	0	0	0	0	0	0	0	640	640	0	2010.624

	Basal Areas	Mean Basal Areas
Quercus prinus	53.906%	23.06
Betula lenta	13.281%	22.25
Prunus serotina	11.250%	28.27
Quercus rubra	13.281%	26.70
Fraxinus americana	0.156%	3.14
Acer rubrum	2.656%	8.90
Acer sacharum	1.406%	9.42
Vaccinium angustifolium	0.000%	
Pinus strobus	0.078%	1.57
Carya glabra	3.906%	15.71
Amelanchier arborea	0.000%	
Tsuga canadensis	0.000%	
Juniperus virginiana	0.078%	1.57
TOTAL	100.000%	140.61

QUADRAT 3

SPECIES	SEEDLING	SAPLING	Size classes (DBH) in inches																									Total #	Total #
	0.25	0.5	1	2	3	4	5	6	7	8	9	10	11	12	13	14	15	16	17	18	19	20	21	22	23	24	25	individuals	Species
Quercus prinus	0	0				1		2	4	1	1	2	2	1							1							15	1
Betula lenta	0	0	1	2	5	4	4	4	1	4	1	1																27	1
Hamamelis virginiana	0	1	1																									2	1
Quercus rubra	0	0											1			1	1											3	1
Rhododendron maximum	0	3	9	13	10																							35	1
Acer rubrum	0	0			1	1	1	4	1		1																	9	1
Vaccinium angustifolium	0	0																										0	0
Tsuga canadensis	0	0	2	1	5	2	4	4	1	3	5	2	1		1	2		1										34	1
TOTAL	0	2	13	32	63	32	45	84	49	64	72	50	44	12	13	42	15	16	0	0	19	0	0	0	0	0	0	125	7
																											667		
																											2095.447		

	SEEDLING	SAPLING																										Sum of	Basal
		0.5	1	2	3	4	5	6	7	8	9	10	11	12	13	14	15	16	17	18	19	20	21	22	23	24	25	Diameters	Areas
Quercus prinus	0	0	0	0	0	4	0	12	28	8	9	20	22	12	0	0	0	0	0	0	19	0	0	0	0	0	0	134	420.97
Betula lenta	0	0	1	4	15	16	20	24	7	32	9	10	0	0	0	0	0	0	0	0	0	0	0	0	0	0	0	138	433.54
Hamamelis virginiana	0	0.5	1	0	0	0	0	0	0	0	0	0	0	0	0	0	0	0	0	0	0	0	0	0	0	0	0	1.5	4.71
Quercus rubra	0	0	0	0	0	0	0	0	0	0	0	0	11	0	0	14	15	0	0	0	0	0	0	0	0	0	0	40	125.66
Rhododendron maximum	0	1.5	9	26	30	0	0	0	0	0	0	0	0	0	0	0	0	0	0	0	0	0	0	0	0	0	0	66.5	208.92
Acer rubrum	0	0	0	0	3	4	5	24	7	0	9	0	0	0	0	0	0	0	0	0	0	0	0	0	0	0	0	52	163.36
Vaccinium angustifolium	0	0	0	0	0	0	0	0	0	0	0	0	0	0	0	0	0	0	0	0	0	0	0	0	0	0	0	0	0.00
Tsuga canadensis	0	0	2	2	15	8	20	24	7	24	45	20	11	0	13	28	0	16	0	0	0	0	0	0	0	0	0	235	738.28
TOTAL	0	2	13	32	63	32	45	84	49	64	72	50	44	12	13	42	15	16	0	0	19	0	0	0	0	0	0	667	2095.447
																												2095.447	

	Basal Areas	Mean Basal Areas
Quercus prinus	20.09%	28.06
Betula lenta	20.69%	16.06
Hamamelis virginiana	0.22%	2.36
Quercus rubra	6.00%	41.89
Rhododendron maximum	9.97%	5.97
Acer rubrum	7.80%	18.15
Vaccinium angustifolium	0.00%	
Tsuga canadensis	35.23%	21.71
TOTAL	100.00%	134.20

QUADRAT 4

SPECIES	SEEDLING	SAPLING 0.5	1	2	3	4	5	6	7	8	9	10	11	12	13	14	15	16	17	18	19	20	21	22	23	24	25		Total # individuals	Total # Species
			Size classes (DBH in inches)																											
Quercus prinus	0	0										2	3		1	2	1	2			5								16	1
Betula lenta	0	0			1	1																							2	1
Acer saccharum	0	1		1	1																								3	1
Quercus rubra	0	0				1	2																						3	1
Amelanchier arborea	0	3		2		2																							7	1
Acer rubrum	0	0																											0	
Acer penylvanicum	0	0																											0	
Tsuga canadensis			1	3		3	1	2	4	6	3	1	3	1		3	1												32	
TOTAL	0	2	1	12	6	28	15	12	28	48	27	30	66	12	13	70	30	32	0	0	95	0	0	0	0	0	0	527	63	5
																												1655.6232		

	SEEDLING	SAPLING 0.5	1	2	3	4	5	6	7	8	9	10	11	12	13	14	15	16	17	18	19	20	21	22	23	24	25		Sum of Diameters	Basal Areas
Quercus prinus	0	0	0	0	0	0	0	0	0	0	0	20	33	0	13	28	15	32	0	0	95	0	0	0	0	0	0		236	741.42
Betula lenta	0	0	0	0	3	4	0	0	0	0	0	0	0	0	0	0	0	0	0	0	0	0	0	0	0	0	0		7	21.99
Acer saccharum	0	0.5	0	2	3	0	0	0	0	0	0	0	0	0	0	0	0	0	0	0	0	0	0	0	0	0	0		5.5	17.28
Quercus rubra	0	0	0	0	0	4	10	0	0	0	0	0	0	0	0	0	0	0	0	0	0	0	0	0	0	0	0		14	43.98
Amelanchier arborea	0	1.5	0	4	0	8	0	0	0	0	0	0	0	0	0	0	0	0	0	0	0	0	0	0	0	0	0		13.5	42.41
Acer rubrum	0	0	0	0	0	0	0	0	0	0	0	0	0	0	0	0	0	0	0	0	0	0	0	0	0	0	0		0	0.00
Acer penylvanicum	0	0	0	0	0	0	0	0	0	0	0	0	0	0	0	0	0	0	0	0	0	0	0	0	0	0	0		0	0.00
Tsuga canadensis		0	1	6	0	12	5	12	28	48	27	10	33	12	0	42	15	0	0	0	0	0	0	0	0	0	0		251	788.54
TOTAL	0	2	1	12	6	28	15	12	28	48	27	30	66	12	13	70	30	32	0	0	95	0	0	0	0	0	0	527	527	1655.62
																												1655.6232		

	Basal Areas	Mean Basal Areas
Quercus prinus	44.78%	46.34
Betula lenta	1.33%	11.00
Acer saccharum	1.04%	5.76
Quercus rubra	2.66%	14.66
Amelanchier arborea	2.56%	6.06
Acer rubrum	0.00%	
Acer penylvanicum	0.00%	
Tsuga canadensis	47.63%	24.64
TOTAL	100.00%	108.46

QUADRAT 5

Size classes (DBH in Inches)

SPECIES	SEEDLING 0.25	SAPLING 0.5	1	2	3	4	5	6	7	8	9	10	11	12	13	14	15	16	17	18	19	20	21	22	23	24	25		Total# Individuals		Total# Species
																													0		
Betula lenta	0	0								2	1	1	2	2	1	1	3	4			1								18		1
Acer saccharum	0	0	1					1		2				1			2												7		1
Quercus rubra	0	0										1				1					1								3		1
Fagus grandifolia	0	0				1	1	1	1	1																			5		1
Acer rubrum	0	0																											0		
Tsuga canadensis	0	0						1																					1		1
TOTAL	0	0	1	0	0	4	5	18	7	40	9	20	22	36	13	28	75	64	0	0	38	0	0	0	0	0	0	380	34		5
																												1193.808			

	SEEDLING 0.25	SAPLING 0.5	1	2	3	4	5	6	7	8	9	10	11	12	13	14	15	16	17	18	19	20	21	22	23	24	25		Sum of Diameters		Basal Areas
Betula lenta			0	0	0	0	0	0	0	0	16	9	10	22	24	13	14	45	64	0	0	19	0	0	0	0	0		236		741.42
Acer saccharum	0	0	0	1	0	0	0	0	6	0	16	0	0	0	12	0	0	30	0	0	0	0	0	0	0	0	0		65		204.20
Quercus rubra	0	0	0	0	0	0	0	0	0	0	0	0	10	0	0	0	14	0	0	0	0	19	0	0	0	0	0		43		135.09
Fagus grandifolia	0	0	0	0	0	0	4	5	6	7	8	0	0	0	0	0	0	0	0	0	0	0	0	0	0	0	0		30		94.25
Acer rubrum	0	0	0	0	0	0	0	0	0	0	0	0	0	0	0	0	0	0	0	0	0	0	0	0	0	0	0		0		0.00
Tsuga canadensis	0	0	0	0	0	0	0	0	6	0	0	0	0	0	0	0	0	0	0	0	0	0	0	0	0	0	0		6		18.85
			0	0	0	0	0	0	0	0	0	0	0	0	0	0	0	0	0	0	0	0	0	0	0	0	0		0		0.00
TOTAL	0	0	0	1	0	0	4	5	18	7	40	9	20	22	36	13	28	75	64	0	0	38	0	0	0	0	0	380	380		1193.808
																												1193.808			

	Basal Areas	Mean Basal Areas
Betula lenta	62.11%	41.19
Acer saccharum	17.11%	29.17
Quercus rubra	11.32%	45.03
Fagus grandifolia	7.89%	18.85
Acer rubrum	0.00%	
Tsuga canadensis	1.58%	18.85
TOTAL	100.00%	153.09

QUADRAT 6

SPECIES	SEEDLING	SAPLING	Size classes (DBH in inches)																										Total# Individuals		Total# Species
	0.25	0.5	1	2	3	4	5	6	7	8	9	10	11	12	13	14	15	16	17	18	19	20	21	22	23	24	25				
Quercus prinus	0	0												1	1	1	1												4		1
Betula lenta	1	7	4	2				2							1		2												19		1
Rhododendron maximum	0	0	4	10	4	1	1																						20		1
Quercus rubra	0	0	1														2												3		1
Acer pensylvanicum	0	1	1	1																									3		1
Acer rubrum	0	0				1		1																					2		1
Acer sacharum	0	0																											0		
Amelanchier arborea	0	0		1																									1		1
Tsuga canadensis	0	1																											1		1
TOTAL	1	4.5	10	28	12	8	5	18	0	0	0	0	0	12	26	14	75	0	0	0	0	0	0	0	0	0	0	208	53		8
																												653.4528			

	SEEDLING	SAPLING																											Sum of Diameters		Basal Areas
	0.25	0.5	1	2	3	4	5	6	7	8	9	10	11	12	13	14	15	16	17	18	19	20	21	22	23	24	25				
Quercus prinus	0	0	0	0	0	0	0	0	0	0	0	0	0	12	13	14	15	0	0	0	0	0	0	0	0	0	0		54		169.65
Betula lenta	0.25	3.5	4	4	0	0	0	12	0	0	0	0	0	0	13	0	30	0	0	0	0	0	0	0	0	0	0		66.75		209.70
Rhododendron maximum	0	0	4	20	12	4	5	0	0	0	0	0	0	0	0	0	0	0	0	0	0	0	0	0	0	0	0		45		141.37
Quercus rubra	0	0	1	0	0	0	0	0	0	0	0	0	0	0	0	0	30	0	0	0	0	0	0	0	0	0	0		31		97.39
Acer pensylvanicum	0	0.5	1	2	0	0	0	0	0	0	0	0	0	0	0	0	0	0	0	0	0	0	0	0	0	0	0		3.5		11.00
Acer rubrum	0	0	0	0	0	4	0	6	0	0	0	0	0	0	0	0	0	0	0	0	0	0	0	0	0	0	0		10		31.42
Acer sacharum	0	0	0	0	0	0	0	0	0	0	0	0	0	0	0	0	0	0	0	0	0	0	0	0	0	0	0		0		0.00
Amelanchier arborea	0	0	0	2	0	0	0	0	0	0	0	0	0	0	0	0	0	0	0	0	0	0	0	0	0	0	0		2		6.28
Tsuga canadensis	0	0.5	0	0	0	0	0	0	0	0	0	0	0	0	0	0	0	0	0	0	0	0	0	0	0	0	0		0.5		1.57
TOTAL	0.25	4.5	10	28	12	8	5	18	0	0	0	0	0	12	26	14	75	0	0	0	0	0	0	0	0	0	0	212.75	212.75		668.3754
																												668.3754			

	Basal Areas	Mean Basal Areas
Quercus prinus	25.38%	42.41
Betula lenta	31.37%	11.04
Rhododendron maximum	21.15%	7.07
Quercus rubra	14.57%	32.46
Acer pensylvanicum	1.65%	3.67
Acer rubrum	4.70%	15.71
Acer sacharum	0.00%	
Amelanchier arborea	0.94%	6.28
Tsuga canadensis	0.24%	1.57
TOTAL	100.00%	120.21

QUADRAT 7

SPECIES	SEEDLING	SAPLINGS		Size classes in (DBH in inches)																								Total #		Total #
	0.25	0.5	1	2	3	4	5	6	7	8	9	10	11	12	13	14	15	16	17	18	19	20	21	22	23	24	25		Individuals		Species
Quercus prinus	0	0			1		3	2	4	4	2	1	1		1			1		3	1										
Quercus rubra	0	0		2			2		1	3		1	1							1									11		1
Acer saccharum	0	0			1					1				1															3		1
Amelanchier arborea	0	0		2	2	1	1																						6		1
Kalmia latifolia	0.5	0		1																									1.5		1
Acer rubrum	0	0			3		2								1														6		1
Sassafras albidum	0	0					1																						1		1
Nyssa sylvatica	0	0				1	1																						2		1
Quercus alba	0	0																											0		0
TOTAL	0.5	0	0	10	21	8	50	12	35	64	18	20	22	12	26	0	0	16	0	72	19	0	0	0	0	0	0	405	30.5		7
																												1272.348			

	SEEDLING	SAPLINGS																											Sum of		Basal
	0.25	0.5	1	2	3	4	5	6	7	8	9	10	11	12	13	14	15	16	17	18	19	20	21	22	23	24	25		Diameters		Areas
Quercus prinus	0	0	0	0	3	0	15	12	28	32	18	10	11	0	13	0	0	16	0	54	19	0	0	0	0	0	0		231		725.71
Quercus rubra	0	0	0	4	0	0	10	0	7	24	0	10	11	0	0	0	0	0	0	18	0	0	0	0	0	0	0		84		263.89
Acer saccharum	0	0	0	0	3	0	0	0	0	8	0	0	0	12	0	0	0	0	0	0	0	0	0	0	0	0	0		23		72.26
Amelanchier arborea	0	0	0	4	6	4	5	0	0	0	0	0	0	0	0	0	0	0	0	0	0	0	0	0	0	0	0		19		59.69
Kalmia latifolia	0.125	0	0	2	0	0	0	0	0	0	0	0	0	0	0	0	0	0	0	0	0	0	0	0	0	0	0		2.125		6.68
Acer rubrum	0	0	0	0	9	0	10	0	0	0	0	0	0	0	13	0	0	0	0	0	0	0	0	0	0	0	0		32		100.53
Sassafras albidum	0	0	0	0	0	0	5	0	0	0	0	0	0	0	0	0	0	0	0	0	0	0	0	0	0	0	0		5		15.71
Nyssa sylvatica	0	0	0	0	0	4	5	0	0	0	0	0	0	0	0	0	0	0	0	0	0	0	0	0	0	0	0		9		28.27
Quercus alba	0	0	0	0	0	0	0	0	0	0	0	0	0	0	0	0	0	0	0	0	0	0	0	0	0	0	0		0		0.00
TOTAL	0.125	0	0	10	21	8	50	12	35	64	18	20	22	12	26	0	0	16	0	72	19	0	0	0	0	0	0	405.125	405.125		1272.741
																												1272.741			

	Basal Areas	Mean Basal Areas
Quercus prinus	57.02%	65.97
Quercus rubra	20.73%	87.96
Acer saccharum	5.68%	12.04
Amelanchier arborea	4.69%	39.79
Kalmia latifolia	0.52%	1.11
Acer rubrum	7.90%	100.53
Sassafras albidum	1.23%	7.85
Nyssa sylvatica	2.22%	
Quercus alba	0.00%	
TOTAL	100.00%	315.27

QUADRAT 8

SPECIES	SEEDLING	SAPLINGS	Size classes (DBH in inches)																									Total # Individuals	Total # Species
	0.25	0.5	1	2	3	4	5	6	7	8	9	10	11	12	13	14	15	16	17	18	19	20	21	22	23	24	25		
Rhododendron maximum	0	0	1	3	17	32	15	1																				69	1
Acer rubrum	0	0	1	2	2	5	6	5	5	2	2	1																31	1
Quercus rubra	0	0			3				1					1		1			1	2								9	1
Kalmia latifolia	0	0	5	6	3	1																						15	1
Quercus prinus	0	0		1		3		1		1		3		1		1	4	3		1		1	1		1		1	23	1
Amelanchier arborea	0	0			1	1																						2	1
Sassafras albidum	0	0						1																				1	1
Carya glabra	0	0			1																							1	1
Acer saccharum	0	0		1																								1	1
Betula lenta									1																			1	1
TOTAL	0	0	7	26	81	168	105	48	49	24	18	40	0	24	0	28	60	48	17	54	0	20	21	0	23	0	25	886	153	10
																												2783.458		

	SEEDLING	SAPLING																										Sum of Diameters	Basal Areas
	0.25	0.5	1	2	3	4	5	6	7	8	9	10	11	12	13	14	15	16	17	18	19	20	21	22	23	24	25		
Rhododendron maximum	0	0	1	6	51	128	75	6	0	0	0	0	0	0	0	0	0	0	0	0	0	0	0	0	0	0	0	267	838.81
Acer rubrum	0	0	1	4	6	20	30	30	35	16	18	10	0	0	0	0	0	0	0	0	0	0	0	0	0	0	0	170	534.07
Quercus rubra	0	0	0	0	9	0	0	0	7	0	0	0	0	12	0	14	0	0	17	36	0	0	0	0	0	0	0	95	298.45
Kalmia latifolia	0	0	5	12	9	4	0	0	0	0	0	0	0	0	0	0	0	0	0	0	0	0	0	0	0	0	0	30	94.25
Quercus prinus	0	0	0	2	0	12	0	6	0	8	0	30	0	12	0	14	60	48	0	18	0	20	21	0	23	0	25	299	939.34
Amelanchier arborea	0	0	0	0	3	4	0	0	0	0	0	0	0	0	0	0	0	0	0	0	0	0	0	0	0	0	0	7	21.99
Sassafras albidum	0	0	0	0	0	0	0	6	0	0	0	0	0	0	0	0	0	0	0	0	0	0	0	0	0	0	0	6	18.85
Carya glabra	0	0	0	0	3	0	0	0	0	0	0	0	0	0	0	0	0	0	0	0	0	0	0	0	0	0	0	3	9.42
Acer saccharum	0	0	0	2	0	0	0	0	0	0	0	0	0	0	0	0	0	0	0	0	0	0	0	0	0	0	0	2	6.28
Betula lenta		0	0	0	0	0	0	0	7	0	0	0	0	0	0	0	0	0	0	0	0	0	0	0	0	0	0	7	21.99
TOTAL	0	0	7	26	81	168	105	48	49	24	18	40	0	24	0	28	60	48	17	54	0	20	21	0	23	0	25	886	886	2783.458
																												2783.458		

	Basal Area	Mean Basal Area
Rhododendron maximum	30.14%	12.16
Acer rubrum	19.19%	17.23
Quercus rubra	10.72%	33.16
Kalmia latifolia	3.39%	6.28
Quercus prinus	33.75%	40.84
Amelanchier arborea	0.79%	11.00
Sassafras albidum	0.68%	18.85
Carya glabra	0.34%	9.42
Acer saccharum	0.23%	6.28
Betula lenta	0.79%	21.99
TOTAL AREA BHD	100.00%	177.21

QUADRAT 9

SPECIES	SEEDLING	SAPLING	Size classes (DBH in inches)																									Total # Individuals	Total # Species
	0.25	0.5	1	2	3	4	5	6	7	8	9	10	11	12	13	14	15	16	17	18	19	20	21	22	23	24	25		
Tsuga canadensis	0	0					1										2											3	1
Rhododendron maximum	0	0	2	8	5	1	1																					18	1
Acer pensylvanicum	0	0	2	1	2																							5	1
Betula nigra	1	0		3	4	2	1																					15	1
Ulmus rubra	0	0		3	1	2	2		1	1																		10	1
Acer rubrum	0	0																										0	0
Acer negundo	0	0	2	1																1								4	1
Liriodendron tulipifera	0	0	1	1																								2	1
Betula lenta	0	0	1						1						1				1		1							6	1
Tilia americana	0	2			1																							1	1
Hamamelis virginiana	0	2																										2	1
Fraxinus americana	0	2																									1	1	1
Acer saccharum	0	0						1																				2	1
TOTAL	1	0	0	36	39	20	25	6	14	8	0	0	0	0	13	0	30	0	17	18	19	0	0	0	0	0	25	283	69	12
																												889.0728		

	SEEDLING	SAPLING																										Sum of Diameters	Basal Areas
	0.25	0.5	1	2	3	4	5	6	7	8	9	10	11	12	13	14	15	16	17	18	19	20	21	22	23	24	25		
Tsuga canadensis	0	0	0	0	0	0	5	0	0	0	0	0	0	0	0	0	30	0	0	0	0	0	0	0	0	0	0	35	109.96
Rhododendron maximum	0	2	2	18	15	4	5	0	0	0	0	0	0	0	0	0	0	0	0	0	0	0	0	0	0	0	0	44	138.23
Acer pensylvanicum	0	0	2	2	0	0	0	0	0	0	0	0	0	0	0	0	0	0	0	0	0	0	0	0	0	0	0	10	31.42
Betula nigra	0.25	2	0	0	12	8	5	0	0	0	0	0	0	0	0	0	0	0	0	0	0	0	0	0	0	0	0	33.25	104.46
Ulmus rubra	0	0	0	8	3	0	10	0	7	8	0	0	0	0	0	0	0	0	0	0	0	0	0	0	0	0	0	42	131.95
Acer rubrum	0	0	0	0	0	0	0	0	0	0	0	0	0	0	0	0	0	0	0	0	0	0	0	0	0	0	0	0	0.00
Acer negundo	0	0	2	2	0	0	0	0	0	0	0	0	0	0	0	0	0	0	0	18	0	0	0	0	0	0	0	22	69.12
Liriodendron tulipifera	0	0	1	2	0	0	0	0	0	0	0	0	0	0	0	0	0	0	0	0	0	0	0	0	0	0	0	3	9.42
Betula lenta	0	0.5	1	0	0	0	0	0	7	0	0	0	0	0	13	0	0	0	17	0	19	0	0	0	0	0	0	57.5	180.64
Tilia americana	0	0	0	0	3	0	0	0	0	0	0	0	0	0	0	0	0	0	0	0	0	0	0	0	0	0	0	3	9.42
Hamamelis virginiana	0	0	0	0	0	0	0	0	0	0	0	0	0	0	0	0	0	0	0	0	0	0	0	0	0	0	0	1	3.14
Fraxinus americana	0	0	0	0	0	0	0	0	0	0	0	0	0	0	0	0	0	0	0	0	0	0	0	0	0	0	25	25	78.54
Acer saccharum	0	0.5	0	0	0	0	0	6	0	0	0	0	0	0	0	0	0	0	0	0	0	0	0	0	0	0	0	6.5	20.42
TOTAL	0.25	0	0	36	39	20	25	6	14	8	0	0	0	0	13	0	30	0	17	18	19	0	0	0	0	0	25	282.25	282.25	886.7166
																												886.7166		

	Basal Areas	Mean Basal Area
Tsuga canadensis	12.40%	36.65
Rhododendron maximum	15.59%	7.68
Acer pensylvanicum	3.54%	6.28
Betula nigra	11.78%	6.96
Ulmus rubra	14.88%	13.19
Acer rubrum	0.00%	
Acer negundo	7.79%	17.28
Liriodendron tulipifera	1.06%	4.71
Betula lenta	20.37%	30.11
Tilia americana	1.06%	9.42
Hamamelis virginiana	0.35%	1.57
Fraxinus americana	8.86%	78.54
Acer saccharum	2.30%	10.21
TOTAL	100.00%	222.62

QUADRAT 10

SPECIES	SEEDLING	SAPLING	Size classes (DBH in inches)																									Total #	Total #
	0.25	0.5	1	2	3	4	5	6	7	8	9	10	11	12	13	14	15	16	17	18	19	20	21	22	23	24	25	Individuals	Species
Quercus prinus	0	0						1	3		1	2	3	3														13	1
Amelanchier arborea	0	0				1																						1	1
Quercus rubra	0	0			1	2			1	1			2				2					2						11	1
Acer rubrum	0	0																										0	0
Carya glabra	0	0		1								1																2	1
Quercus alba	0	0											1		1	1							1	1				5	1
Cornus florida	0	0		1																								1	1
Kalmia latifolia	0	0		1	1																							2	1
Betula lenta	0	0				1																						1	1
Quercus marilandica	0	0		1		1	2																					4	1
TOTAL	0	0	0	8	6	20	10	6	28	8	9	30	66	36	13	14	30	0	0	0	0	40	21	22	0	0	0	40	9
																											367		
																											1152.967		

QUADRAT 10

	SEEDLING	SAPLING																										Sum of	Basal
	.25	0.5	1	2	3	4	5	6	7	8	9	10	11	12	13	14	15	16	17	18	19	20	21	22	23	24	25	Diameters	Area
Quercus prinus	0	0	0	0	0	0	5	18	0	8	18	30	33	0	0	0	0	0	0	0	0	0	0	0	0	0	0	112	351.86
Amelanchier arborea	0	0	0	0	3	0	0	0	0	0	0	0	0	0	0	0	0	0	0	0	0	0	0	0	0	0	0	3	9.42
Quercus rubra	0	0	0	2	6	0	0	6	7	0	0	20	0	0	0	28	0	0	0	0	38	0	0	0	0	0	0	107	336.15
Acer rubrum	0	0	0	0	0	0	0	0	0	0	0	0	0	0	0	0	0	0	0	0	0	0	0	0	0	0	0	0	0.00
Carya glabra	0	0	1	0	0	0	0	0	0	0	9	0	0	0	0	0	0	0	0	0	0	0	0	0	0	0	0	10	31.42
Quercus alba	0	0	0	0	0	0	0	0	0	0	0	10	0	12	13	0	0	0	0	0	0	20	21	0	0	0	0	76	238.76
Cornus florida	0	0	1	0	0	0	0	0	0	0	0	0	0	0	0	0	0	0	0	0	0	0	0	0	0	0	0	1	3.14
Kalmia lactifolia	0	0	1	2	0	0	0	0	0	0	0	0	0	0	0	0	0	0	0	0	0	0	0	0	0	0	0	3	9.42
Betula lenta	0	0	0	0	3	0	0	0	0	0	0	0	0	0	0	0	0	0	0	0	0	0	0	0	0	0	0	3	9.42
Quercus marilandica	0	0	1	0	3	8	0	0	0	0	0	0	0	0	0	0	0	0	0	0	0	0	0	0	0	0	0	12	37.70
																												0	
TOTAL	0	0	4	4	15	8	5	24	7	8	27	60	33	12	13	28	0	0	0	0	38	20	21	0	0	0	0	327	1027.303
																												1027.303	

	Basal Areas	Mean Basal Area
Quercus prinus	34.25%	27.07
Amelanchier arborea	0.92%	9.42
Quercus rubra	32.72%	30.56
Acer rubrum	0.00%	
Carya glabra	3.06%	15.71
Quercus alba	23.24%	47.75
Cornus florida	0.31%	3.14
Kalmia lactifolia	0.92%	4.71
Betula lenta	0.92%	9.42
Quercus marilandica	3.67%	9.42
TOTAL	100.00%	157.21

Quadrat 11

SPECIES	SEEDLING	SAPLING		Size	classes	(DB	Hin	inches)																				Total#		Total#
	0.25	0.5	1	2	3	4	5	6	7	8	9	10	11	12	13	14	15	16	17	18	19	20	21	22	23	24	25		Individuals		Species
Betula lenta	0	200	66	86	36	42	8														2				2				442		1
Quercus prinus	0	0			2					2	2						2	2									2		12		1
Tsuga canadensis	0	6																											6		1
Quercus rubra	0	0											2			2													4		1
Nyssa sylvatica	0	0					2						2																4		1
Pinus rigida	0	0															2												2		1
Betula populifolia	0	0		4																									4		1
TOTAL	0	103	66	·····	·····	·····	50	0	0	16	18	0	44	0	0	28	60	32	0	0	38	0	0	0	46	0	50	1013	474		7
																												3182.441			

QUADRAT 11	SEEDLING	SAPLING																											Sum of		Basal
	0.25	0.5	1	2	3	4	5	6	7	8	9	10	11	12	13	14	15	16	17	18	19	20	21	22	23	24	25		Diameters		Areas
Betula lenta	0	100	66	·····	·····	·····	40	0	0	0	0	0	0	0	0	0	0	0	0	0	38	0	0	0	46	0	0		738		2318.50
Quercus prinus	0	0	0	0	6	0	0	0	0	16	18	0	0	0	0	0	30	32	0	0	0	0	0	0	0	0	50		152		477.52
Tsuga canadensis	0	3	0	0	0	0	0	0	0	0	0	0	0	0	0	0	0	0	0	0	0	0	0	0	0	0	0		3		9.42
Quercus rubra	0	0	0	0	0	0	0	0	0	0	0	0	22	0	0	28	0	0	0	0	0	0	0	0	0	0	0		50		157.08
Nyssa sylvatica	0	0	0	0	0	0	10	0	0	0	0	0	22	0	0	0	0	0	0	0	0	0	0	0	0	0	0		32		100.53
Pinus rigida	0	0	0	0	0	0	0	0	0	0	0	0	0	0	0	0	30	0	0	0	0	0	0	0	0	0	0		30		94.25
Betula populifolia	0	0	0	8	0	0	0	0	0	0	0	0	0	0	0	0	0	0	0	0	0	0	0	0	0	0	0		8		25.13
	0	0	0	0	0	0	0	0	0	0	0	0	0	0	0	0	0	0	0	0	0	0	0	0	0	0	0		0		0.00
	0	0	0	0	0	0	0	0	0	0	0	0	0	0	0	0	0	0	0	0	0	0	0	0	0	0	0		0		0.00
	0	0	0	0	0	0	0	0	0	0	0	0	0	0	0	0	0	0	0	0	0	0	0	0	0	0	0		0		0.00
																													0		
TOTAL	0	103	66	·····	·····	·····	50	0	0	16	18	0	44	0	0	28	60	32	0	0	38	0	0	0	46	0	50	1013	1013		3182.441
																												3182.441			

	Basal Areas	Mean Basal Area
Betula lenta	72.85%	5.25
Quercus prinus	15.00%	39.79
Tsuga canadensis	0.30%	1.57
Quercus rubra	4.94%	39.27
Nyssa sylvatica	3.16%	25.13
Pinus rigida	2.96%	47.12
Betula populifolia	0.79%	6.28
TOTAL	100.00%	164.42

QUADRAT 12

SPECIES	SEEDLING	SAPLING	Size classes (DBH in Inches)																									Total # Individuals	Total # Species
	0.25	0.5	1	2	3	4	5	6	7	8	9	10	11	12	13	14	15	16	17	18	19	20	21	22	23	24	25		
Tsuga canadensis	0	0		2	2	4		2					4		2	2				2								20	1
Rhododendron maximum	0	0	8	18	14	1																						41	1
Quercus prinus	0	0						4		2						4	2			2								14	1
Cornus florida	0	0			2																							2	1
Acer rubrum	0	0				2				2																		4	1
Quercus rubra	0	0									2									2	2	2						8	1
Betula lenta	12	0		2																								14	1
TOTAL	12	0	8	40	48	12	0	24	0	32	18	0	0	0	0	56	30	0	0	72	38	40	0	0	0	0	0	430	83	6
																												1350.888		

	SEEDLING	SAPLING																										Sum of Diameters	Basal Areas
	0.25	0.5	1	2	3	4	5	6	7	8	9	10	11	12	13	14	15	16	17	18	19	20	21	22	23	24	25		
Tsuga canadensis	0	0	0	4	6	16	0	12	0	0	0	0	44	0	26	28	0	0	0	36	0	0	0	0	0	0	0	172	540.36
Rhododendron maximum	0	0	8	36	42	4	0	0	0	0	0	0	0	0	0	0	0	0	0	0	0	0	0	0	0	0	0	90	282.74
Quercus prinus	0	0	0	0	0	0	0	24	0	16	0	0	0	0	0	56	30	0	0	36	0	0	0	0	0	0	0	162	508.94
Cornus florida	0	0	0	0	6	0	0	0	0	0	0	0	0	0	0	0	0	0	0	0	0	0	0	0	0	0	0	6	18.85
Acer rubrum	0	0	0	0	0	8	0	0	0	16	0	0	0	0	0	0	0	0	0	0	0	0	0	0	0	0	0	24	75.40
Quercus rubra	0	0	0	0	0	0	0	0	0	0	18	0	0	0	0	0	0	0	0	36	38	40	0	0	0	0	0	132	414.69
Betula lenta	3	0	0	4	0	0	0	0	0	0	0	0	0	0	0	0	0	0	0	0	0	0	0	0	0	0	0	7	21.99
	0	0	0	0	0	0	0	0	0	0	0	0	0	0	0	0	0	0	0	0	0	0	0	0	0	0	0	0	0.00
																												0	
TOTAL	3	0	8	44	54	28	0	36	0	32	18	0	44	0	26	84	30	0	0	****	38	40	0	0	0	0	0	593	593	1862.969
																												1862.969		

	Basal Area	Mean Basal Area
Tsuga canadensis	29.01%	27.02
Rhododendron maximum	15.18%	6.90
Quercus prinus	27.32%	36.35
Cornus florida	1.01%	9.42
Acer rubrum	4.05%	18.85
Quercus rubra	22.26%	51.84
Betula lenta	1.18%	1.57
TOTAL	100.00%	151.95

APPENDIX B

VEGETATION ASSOCIATIONS AND QUADRAT INFORMATION

VEGETATION ASSOCIATIONS

1. (Q-1) Chestnut Oak Forest (CO)

Association: Chestnut Oak
Location: Along Kaiser trail 800'
Elevation: Center:670' (640-720)'
Slope: 55%
Aspect: North 30° West
Exposure: 3; moderate
Disturbance: 2; Slight
Position:2; midslope
Sample Size: 1/10th Hectare; 50 m x 20 m
(.25 acres = 10,784 sq. ft. = 164.4 ft. x 65.6 feet)
Date: 11/15/93

Dominant species:	Quecus prinus	71%

2. (Q-2) Mixed Oak Forest (MO)

Association: Chestnut Oak/Red Oak
Location:
Elevation: 755'
Slope: 0%
Aspect: none
Exposure: 4
Disturbance: 3
Position:5
Sample Size: 1/10th Hectare; 50m X 10m
Date: 11/16/93

Dominant species:	Quercus prinus	54%
	Quercus rubra	13%
	Betula lenta	13%
	Prunus serotina	11 %

3. (Q-3) Hemlock/Mixed Hardwood/Rhododendron (H/MH/R)

Association: Hemlock/Chestnut Oak/Rhodo
Location:
Elevation: 490' (440-550')
Slope: 68%
Aspect: west
Exposure: 2
Disturbance: 3.5, due to mine shaft spoil
Position:3
Sample Size: 1/10th Hectare; 50m x 20 m
Date: 11/16/93

Dominant species:	Tsuga canadensis	35%
	Quercus prinus	20%
	Betula lental	20%
	Rhododendron	10%

4. (Q-4) Hemlock/Chestnut Oak (H/CO)

Association: Hemlock/Chestnut Oak
Location: 150' north of control point #13
Elevation: 550' (530-565'}
Slope: 76%
Aspect: north/west
Exposure: 3
Disturbance: slight
Position:
Sample Size: 1/10th Hectare
Date:

Dominant species:	Tsuga canadensis	47%
	Quercus prinus	45%

5. (Q-5) Black Birch/Mixed Hardwood (BB/MH)

Association: Birch/Mixed Hardwood
Location: 270° north of 50° W. of S.E. corner
Elevation: 470 (465-480')
Slope: 2%; flat
Aspect: none
Exposure: 3
Disturbance: 4
Position:
Sample Size: 1/10th Hectare

Dominant species:	Betula lenta	64%
	Acer saccharum	17%
	Quercus rubra	11%

6. (Q-6) Mixed Hardwood/Rhododendron (MH/R)

Association: Birch/Oak /Rhodo
Location:
Elevation: 460' (420-530')
Slope: 82%
Aspect: east
Exposure: 2
Disturbance: 4
Position:
Sample Size: 1/10th Hectare
Date: 11/17/93

Dominant species:	Betula lenta	31%
	Quercus prinus	25%
	Rhododendron	21%

7. (Q-7) Mixed Oak Forest (MO)

Association: Chestnut Oak/Red Oak
Location: 380' from top of ridge 15° S.W.
Elevation: 852' (848-856')
Slope: 8%

Aspect: north/west
Exposure:
Disturbance:
Position:
Sample Size: 1/10th Hectare
Date: 11/23/93

Dominant species:	Quercus prinus	57%
	Quercus rubra	21%

8. (Q-8) Chestnut Oak/ Rhododendron (CO/R)

Association: Chestnut oak/rhodo
Location: 500' above ridge
Elevation: 850' (840-860')
Slope: 17%
Aspect: north/west
Exposure:
Disturbance:
Position:
Sample Size: 1/10th Hectare
Date: 11/22/93
Soil:

Dominant:	Quercus prinus	34%
	Rhododendron	30%

9. (Q-9) Mixed Hardwood/Rhododendron (MH/R)

Association: Birch/Elm/Rhodo
Location: Riverine: Below lower mine; center line along steam; Top of Quadrat is near wetland observation point W87.
Elevation: 395' (380-410')
Slope: 11%
Aspect: north
Exposure: 2
Disturbance: 4
Position:
Sample Size: 1/10th Hectare
Date: 11/22/93

Dominant:	Betula lenta	20%
	Rhododendron	15%
	Ulmus rubra	14%
	Betula nigra	11%

10. (Q-10) Mixed Oak (MO)

Association: Chestnut Oak/Red Oak/ White Oak
Location: 600' S 40° E from top.
Elevation: 810' (780-830')
Slope: 15%
Aspect: North 40o West

Exposure: moderate
Disturbance: 1-2
Position:
Sample Size: 1/10th Hectare; 50 x 20m.
Date: 11/23/93

Dominant:	Quercus prinus	34%
	Quercus rubra	33%
	Quercus alba	23%

11. (Q-11) Black Birch/Mixed Hardwood (BB/MH)

Association: Black birch/Chestnut oak
Location: 600' W of Quadrat 10.
Elevation: 775' (750-800')
Slope: 20%
Aspect: west
Exposure: moderate
Disturbance: fire disturbed
Position:
Sample Size: 1/20th Hectare; 50 x 10m.
(164.4 ft. x 32.8 ft)
Date: 11/23/93

Dominant:	Betula lenta	73%
	Quercus prinus	15%

12. (Q-12) Hemlock/Mixed Hardwood/Rhododendron (H/MH/R)

Association: Hemlock/Mixed oak/rhodo
Location: middle of slope near ravine; 100' above bridge.
Elevation: 700' (660-740')
Slope: 45%
Aspect: north 60° west
Exposure: mod. protected
Disturbance: 2-3, rock slides
Position:
Sample Size: 1/20th Hectare; 50 x 10
Date: 11/23/93

Dominant:	Tsuga canadensis	29%
	Quercus prinus	27%
	Quercus rubra	22%
	Rhododendron	16%

APPENDIX C

IMPORTANCE VALUES

APPENDIX C. IMPORTANCE VALUE CALCULATIONS

NUMBER OF INDIVIDUALS

	Quadrats 1	2	3	4	5	6	7	8	9	10	11	12	TOTAL INDIVIDUALS
Acer negundo									4				4
Acer pennsylvanica	0	0				2			5				7
Acer rubrum	18	6	9				6	31				4	74
Acer sacharum	0	3		3	7	1	6	1	2				23
Amelanchier arborea	3	0		7		1	2	2		1			16
Betula lenta	11	12	27	2	18	20		1	6	4	442		543
Betula nigra									15				15
Betula populifolia										2			2
Carya glabra	0	5						1		2			8
Cornus florida										2		2	4
Fagus grandifolia	0	0			5								5
Fraxinus americana	0	1							1				2
Hamamelis virginiana	0	0	2						2				4
Juniperous virginiana	0	1											1
Kalmia latifolia							2	15					17
Liriodendron tulipifera									2	1			3
Nyssa sylvatica							2				4		6
Pinus rigida											2		2
Prunus serotina	0	8											8
Quercus alba										5			5
Quercus marilandica										4			4
Quercus prinus	52	47	15	16		19	11	23		13	12	14	222
Quercus rubra	8	10	3	3	3	3	3	9		11	6	14	73
Rhododendron maximum	0		35			3		69	18			42	167
Sassafras albidum							1	1					2
Tilia americana									1				1
Tsuga canadensis	15	0	34	32	1	1			3		6	20	112
Ulmus rubra									10				10
													0
Total # of Individuals	107	93	125	63	34	50	32	153	55	45	472	96	1325

RELATIVE DENISITY (RD)															
		Quadrats													
		1	2	3	4	5	6	7	8	9	10	11	12		TOTAL
Species		RD	RD												
Acer negundo		0.0%	0.0%	0.0%	0.0%	0.0%	0.0%	0.0%	0.0%	7.3%	0.0%	0.0%	0.0%		7.27%
Acer pennsylvanica		0.0%	0.0%	0.0%	0.0%	0.0%	4.0%	0.0%	0.0%	9.1%	0.0%	0.0%	0.0%		13.09%
Acer rubrum		16.8%	6.5%	7.2%	0.0%	0.0%	0.0%	18.8%	20.3%	0.0%	0.0%	0.0%	4.2%		73.65%
Acer sacharum		0.0%	3.2%	0.0%	4.8%	20.6%	2.0%	18.8%	0.7%	3.6%	0.0%	0.0%	0.0%		53.62%
Amelanchier arborea		2.8%	0.0%	0.0%	11.1%	0.0%	2.0%	4.7%	1.3%	0.0%	2.2%	0.0%	0.0%		24.13%
Betula lenta		10.3%	12.9%	21.6%	3.2%	52.9%	40.0%	0.0%	0.7%	10.9%	8.9%	93.6%	0.0%		255.00%
Betula nigra		0.0%	0.0%	0.0%	0.0%	0.0%	0.0%	0.0%	0.0%	27.3%	0.0%	0.0%	0.0%		27.27%
Betula populifolia		0.0%	0.0%	0.0%	0.0%	0.0%	0.0%	0.0%	0.0%	0.0%	4.4%	0.0%	0.0%		4.44%
Carya glabra		0.0%	5.4%	0.0%	0.0%	0.0%	0.0%	0.0%	0.7%	0.0%	4.4%	0.0%	0.0%		10.47%
Cornus florida		0.0%	0.0%	0.0%	0.0%	0.0%	0.0%	0.0%	0.0%	0.0%	4.4%	0.0%	2.1%		6.53%
Fagus grandifolia		0.0%	0.0%	0.0%	0.0%	14.7%	0.0%	0.0%	0.0%	0.0%	0.0%	0.0%	0.0%		14.71%
Fraxinus americana		0.0%	1.1%	0.0%	0.0%	0.0%	0.0%	0.0%	0.0%	1.8%	0.0%	0.0%	0.0%		2.89%
Hamamelis virginiana		0.0%	0.0%	1.6%	0.0%	0.0%	0.0%	0.0%	0.0%	3.6%	0.0%	0.0%	0.0%		5.24%
Juniperous virginiana		0.0%	1.1%	0.0%	0.0%	0.0%	0.0%	0.0%	0.0%	0.0%	0.0%	0.0%	0.0%		1.08%
Kalmia latifolia		0.0%	0.0%	0.0%	0.0%	0.0%	0.0%	4.7%	9.8%	0.0%	0.0%	0.0%	0.0%		14.49%
Liriodendron tulipifera		0.0%	0.0%	0.0%	0.0%	0.0%	0.0%	0.0%	0.0%	3.6%	2.2%	0.0%	0.0%		5.86%
Nyssa sylvatica		0.0%	0.0%	0.0%	0.0%	0.0%	0.0%	6.3%	0.0%	0.0%	0.0%	0.8%	0.0%		7.10%
Pinus rigida		0.0%	0.0%	0.0%	0.0%	0.0%	0.0%	0.0%	0.0%	0.0%	0.0%	0.4%	0.0%		0.42%
Prunus serotina		0.0%	8.6%	0.0%	0.0%	0.0%	0.0%	0.0%	0.0%	0.0%	0.0%	0.0%	0.0%		8.60%
Quercus alba		0.0%	0.0%	0.0%	0.0%	0.0%	0.0%	0.0%	0.0%	0.0%	11.1%	0.0%	0.0%		11.11%
Quercus marilandica		0.0%	0.0%	0.0%	0.0%	0.0%	0.0%	0.0%	0.0%	0.0%	8.9%	0.0%	0.0%		8.89%
Quercus prinus		48.6%	50.5%	12.0%	25.4%	0.0%	38.0%	34.4%	15.0%	0.0%	28.9%	2.5%	14.6%		269.95%
Quercus rubra		7.5%	10.8%	2.4%	4.8%	8.8%	6.0%	9.4%	5.9%	0.0%	24.4%	1.3%	14.6%		95.77%
Rhododendron maximum		0.0%	0.0%	28.0%	0.0%	0.0%	6.0%	0.0%	45.1%	32.7%	0.0%	0.0%	43.8%		155.58%
Sassafras albidum		0.0%	0.0%	0.0%	0.0%	0.0%	0.0%	3.1%	0.7%	0.0%	0.0%	0.0%	0.0%		3.78%
Tilia americana		0.0%	0.0%	0.0%	0.0%	0.0%	0.0%	0.0%	0.0%	1.8%	0.0%	0.0%	0.0%		1.82%
Tsuga canadensis		14.0%	0.0%	27.2%	50.8%	2.9%	2.0%	0.0%	0.0%	5.5%	0.0%	1.3%	20.8%		124.51%
Ulmus rubra															0.00%
															0.00%
Total # of Individuals		100.0%	100.0%	100.0%	100.0%	100.0%	100.0%	100.0%	100.0%	100.0%	100.0%	100.0%	100.0%		1200.00%

SPECIES DOMINANCE															
		Quadrats													
Species		1	2	3	4	5	6	7	8	9	10	11	12		TOTAL
Basal Area (ba) =		2086	2011	2095	1656	1194	668	1273	2783	887	1027	1591	938		18209.10
Mean ba per tree=		19.50	21.62	16.76	26.28	35.11	13.37	39.77	18.19	16.12	22.83	3.37	9.77		242.69
		Dominance													
		of a Species													
Acer negundo		0.00	0.00	0.00	0.00	0.00	0.00	0.00	0.00	64.49	0.00	0.00	0.00		64.49
Acer pennsylvanica		0.00	0.00	0.00	0.00	0.00	26.74	0.00	0.00	80.61	0.00	0.00	0.00		107.35
Acer rubrum		350.92	129.72	150.87	0.00	0.00	0.00	238.64	563.97	0.00	0.00	0.00	39.07		1473.19
Acer sacharum		0.00	64.86	0.00	78.84	245.78	13.37	238.64	18.19	32.24	0.00	0.00	0.00		691.93
Amelanchier arborea		58.49	0.00	0.00	183.96	0.00	13.37	59.66	36.39	0.00	22.83	0.00	0.00		374.69
Betula lenta		214.45	259.44	452.62	52.56	632.02	267.35	0.00	18.19	96.73	91.32	1490.08	0.00		3574.75
Betula nigra		0.00	0.00	0.00	0.00	0.00	0.00	0.00	0.00	241.83	0.00	0.00	0.00		241.83
Betula populifolia		0.00	0.00	0.00	0.00	0.00	0.00	0.00	0.00	0.00	45.66	0.00	0.00		45.66
Cornus florida		0.00	108.10	0.00	0.00	0.00	0.00	0.00	18.19	0.00	45.66	0.00	0.00		171.95
Carya glabra		0.00	0.00	0.00	0.00	0.00	0.00	0.00	0.00	0.00	45.66	0.00	19.54		65.19
Fagus grandifolia		0.00	0.00	0.00	0.00	175.56	0.00	0.00	0.00	0.00	0.00	0.00	0.00		175.56
Fraxinus americana		0.00	21.62	0.00	0.00	0.00	0.00	0.00	0.00	16.12	0.00	0.00	0.00		37.74
Hamamelis virginiana		0.00	0.00	33.53	0.00	0.00	0.00	0.00	0.00	32.24	0.00	0.00	0.00		65.77
Juniperous virginiana		0.00	21.62	0.00	0.00	0.00	0.00	0.00	0.00	0.00	0.00	0.00	0.00		21.62
Kalmia latifolia		0.00	0.00	0.00	0.00	0.00	0.00	59.66	272.89	0.00	0.00	0.00	0.00		332.55
Liriodendron tulipifera		0.00	0.00	0.00	0.00	0.00	0.00	0.00	0.00	32.24	22.83	0.00	0.00		55.07
Nyssa sylvatica		0.00	0.00	0.00	0.00	0.00	0.00	79.55	0.00	0.00	0.00	13.48	0.00		93.03
Pinus rigida		0.00	0.00	0.00	0.00	0.00	0.00	0.00	0.00	0.00	0.00	6.74	0.00		6.74
Prunus serotina		0.00	172.96	0.00	0.00	0.00	0.00	0.00	0.00	0.00	0.00	0.00	0.00		172.96
Quercus alba		0.00	0.00	0.00	0.00	0.00	0.00	0.00	0.00	0.00	114.14	0.00	0.00		114.14
Quercus marilandica		0.00	0.00	0.00	0.00	0.00	0.00	0.00	0.00	0.00	91.32	0.00	0.00		91.32
Quercus prinus		1013.77	1016.12	251.45	420.47	0.00	253.98	437.50	418.43	0.00	296.78	40.45	136.76		4285.72
Quercus rubra		155.96	216.20	50.29	78.84	105.34	40.10	119.32	163.73	0.00	251.12	20.23	136.76		1337.88
Rhododendron maximum		0.00	0.00	586.73	0.00	0.00	40.10	0.00	1255.28	290.20	0.00	0.00	410.27		2582.58
Sassafras albidum		0.00	0.00	0.00	0.00	0.00	0.00	39.77	18.19	0.00	0.00	0.00	0.00		57.97
Tilia americana		0.00	0.00	0.00	0.00	0.00	0.00	0.00	0.00	16.12	0.00	0.00	0.00		16.12
Tsuga canadensis		292.43	0.00	569.96	840.95	35.11	13.37	0.00	0.00	48.37	0.00	20.23	195.37		2015.79
Ulmus rubra		0.00	0.00	0.00	0.00	0.00	0.00	0.00	0.00	161.22	0.00	0.00	0.00		161.22
		2086.02	2010.62	2095.45	1655.62	1193.81	668.38	1272.74	2783.46	1112.43	1027.30	1591.22	937.77		18434.81

RELATIVE DOMINANCE

Species	Quadrats 1	2	3	4	5	6	7	8	9	10	11	12	
	Dominance of a Species												
Acer negundo	0.0%	0.0%	0.0%	0.0%	0.0%	0.0%	0.0%	0.0%	5.8%	0.0%	0.0%	0.0%	0.06
Acer pennsylvanica	0.0%	0.0%	0.0%	0.0%	0.0%	4.0%	0.0%	0.0%	7.2%	0.0%	0.0%	0.0%	0.11
Acer rubrum	16.8%	6.5%	7.2%	0.0%	0.0%	0.0%	18.8%	20.3%	0.0%	0.0%	0.0%	4.2%	0.74
Acer sacharum	0.0%	3.2%	0.0%	4.8%	20.6%	2.0%	18.8%	0.7%	2.9%	0.0%	0.0%	0.0%	0.53
Amelanchier arborea	2.8%	0.0%	0.0%	11.1%	0.0%	2.0%	4.7%	1.3%	0.0%	2.2%	0.0%	0.0%	0.24
Betula lenta	10.3%	12.9%	21.6%	3.2%	52.9%	40.0%	0.0%	0.7%	8.7%	8.9%	93.6%	0.0%	2.53
Betula nigra	0.0%	0.0%	0.0%	0.0%	0.0%	0.0%	0.0%	0.0%	21.7%	0.0%	0.0%	0.0%	0.22
Betula populifolia	0.0%	0.0%	0.0%	0.0%	0.0%	0.0%	0.0%	0.0%	0.0%	4.4%	0.0%	0.0%	0.04
Carya glabra	0.0%	5.4%	0.0%	0.0%	0.0%	0.0%	0.0%	0.7%	0.0%	4.4%	0.0%	0.0%	0.10
Cornus florida	0.0%	0.0%	0.0%	0.0%	0.0%	0.0%	0.0%	0.0%	0.0%	4.4%	0.0%	2.1%	0.07
Fagus grandifolia	0.0%	0.0%	0.0%	0.0%	14.7%	0.0%	0.0%	0.0%	0.0%	0.0%	0.0%	0.0%	0.15
Fraxinus americana	0.0%	1.1%	0.0%	0.0%	0.0%	0.0%	0.0%	0.0%	1.4%	0.0%	0.0%	0.0%	0.03
Hamamelis virginiana	0.0%	0.0%	1.6%	0.0%	0.0%	0.0%	0.0%	0.0%	2.9%	0.0%	0.0%	0.0%	0.04
Juniperous virginiana	0.0%	1.1%	0.0%	0.0%	0.0%	0.0%	0.0%	0.0%	0.0%	0.0%	0.0%	0.0%	0.01
Kalmia latifolia	0.0%	0.0%	0.0%	0.0%	0.0%	0.0%	4.7%	9.8%	0.0%	0.0%	0.0%	0.0%	0.14
Liriodendron tulipifera	0.0%	0.0%	0.0%	0.0%	0.0%	0.0%	0.0%	0.0%	2.9%	2.2%	0.0%	0.0%	0.05
Nyssa sylvatica	0.0%	0.0%	0.0%	0.0%	0.0%	0.0%	6.3%	0.0%	0.0%	0.0%	0.8%	0.0%	0.07
Pinus rigida	0.0%	0.0%	0.0%	0.0%	0.0%	0.0%	0.0%	0.0%	0.0%	0.0%	0.4%	0.0%	0.00
Prunus serotina	0.0%	8.6%	0.0%	0.0%	0.0%	0.0%	0.0%	0.0%	0.0%	0.0%	0.0%	0.0%	0.09
Quercus alba	0.0%	0.0%	0.0%	0.0%	0.0%	0.0%	0.0%	0.0%	0.0%	11.1%	0.0%	0.0%	0.11
Quercus marilandica	0.0%	0.0%	0.0%	0.0%	0.0%	0.0%	0.0%	0.0%	0.0%	8.9%	0.0%	0.0%	0.09
Quercus prinus	48.6%	50.5%	12.0%	25.4%	0.0%	38.0%	34.4%	15.0%	0.0%	28.9%	2.5%	14.6%	2.70
Quercus rubra	7.5%	10.8%	2.4%	4.8%	8.8%	6.0%	9.4%	5.9%	0.0%	24.4%	1.3%	14.6%	0.96
Rhododendron maximum	0.0%	0.0%	28.0%	0.0%	0.0%	6.0%	0.0%	45.1%	26.1%	0.0%	0.0%	43.8%	1.49
Sassafras albidum	0.0%	0.0%	0.0%	0.0%	0.0%	0.0%	3.1%	0.7%	0.0%	0.0%	0.0%	0.0%	0.04
Tilia americana	0.0%	0.0%	0.0%	0.0%	0.0%	0.0%	0.0%	0.0%	1.4%	0.0%	0.0%	0.0%	0.01
Tsuga canadensis	14.0%	0.0%	27.2%	50.8%	2.9%	2.0%	0.0%	0.0%	4.3%	0.0%	1.3%	20.8%	1.23
Ulmus rubra	0.0%	0.0%	0.0%	0.0%	0.0%	0.0%	0.0%	0.0%	14.5%	0.0%	0.0%	0.0%	0.14

SPECIES FREQUENCY															
		Quadrats													
Species		1	2	3	4	5	6	7	8	9	10	11	12		
Numer of Points		12	12	12	12	12	12	12	12	12	12	12	12		
Absolute Frequency															
		Frequency													
		of a Species													
Acer negundo	1.00	8.33%	8.33%	8.33%	8.33%	8.33%	8.33%	8.33%	8.33%	8.33%	8.33%	8.33%	8.33%		100.00%
Acer pennsylvanica	2.00	16.67%	16.67%	16.67%	16.67%	16.67%	16.67%	16.67%	16.67%	16.67%	16.67%	16.67%	16.67%		200.00%
Acer rubrum	6.00	50.00%	50.00%	50.00%	50.00%	50.00%	50.00%	50.00%	50.00%	50.00%	50.00%	50.00%	50.00%		600.00%
Acer sacharum	7.00	58.33%	58.33%	58.33%	58.33%	58.33%	58.33%	58.33%	58.33%	58.33%	58.33%	58.33%	58.33%		700.00%
Amelanchier arborea	6.00	50.00%	50.00%	50.00%	50.00%	50.00%	50.00%	50.00%	50.00%	50.00%	50.00%	50.00%	50.00%		600.00%
Betula lenta	10.00	83.33%	83.33%	83.33%	83.33%	83.33%	83.33%	83.33%	83.33%	83.33%	83.33%	83.33%	83.33%		1000.00%
Betula nigra	1.00	8.33%	8.33%	8.33%	8.33%	8.33%	8.33%	8.33%	8.33%	8.33%	8.33%	8.33%	8.33%		100.00%
Betula populifolia	1.00	8.33%	8.33%	8.33%	8.33%	8.33%	8.33%	8.33%	8.33%	8.33%	8.33%	8.33%	8.33%		100.00%
Carya glabra	3.00	25.00%	25.00%	25.00%	25.00%	25.00%	25.00%	25.00%	25.00%	25.00%	25.00%	25.00%	25.00%		300.00%
Cornus florida	2.00	16.67%	16.67%	16.67%	16.67%	16.67%	16.67%	16.67%	16.67%	16.67%	16.67%	16.67%	16.67%		200.00%
Fagus grandifolia	1.00	8.33%	8.33%	8.33%	8.33%	8.33%	8.33%	8.33%	8.33%	8.33%	8.33%	8.33%	8.33%		100.00%
Fraxinus americana	2.00	16.67%	16.67%	16.67%	16.67%	16.67%	16.67%	16.67%	16.67%	16.67%	16.67%	16.67%	16.67%		200.00%
Hamamelis virginiana	2.00	16.67%	16.67%	16.67%	16.67%	16.67%	16.67%	16.67%	16.67%	16.67%	16.67%	16.67%	16.67%		200.00%
Juniperous virginiana	1.00	8.33%	8.33%	8.33%	8.33%	8.33%	8.33%	8.33%	8.33%	8.33%	8.33%	8.33%	8.33%		100.00%
Kalmia latifolia	2.00	16.67%	16.67%	16.67%	16.67%	16.67%	16.67%	16.67%	16.67%	16.67%	16.67%	16.67%	16.67%		200.00%
Liriodendron tulipifera	2.00	16.67%	16.67%	16.67%	16.67%	16.67%	16.67%	16.67%	16.67%	16.67%	16.67%	16.67%	16.67%		200.00%
Nyssa sylvatica	2.00	16.67%	16.67%	16.67%	16.67%	16.67%	16.67%	16.67%	16.67%	16.67%	16.67%	16.67%	16.67%		200.00%
Pinus rigida	1.00	8.33%	8.33%	8.33%	8.33%	8.33%	8.33%	8.33%	8.33%	8.33%	8.33%	8.33%	8.33%		100.00%
Prunus serotina	1.00	8.33%	8.33%	8.33%	8.33%	8.33%	8.33%	8.33%	8.33%	8.33%	8.33%	8.33%	8.33%		100.00%
Quercus alba	1.00	8.33%	8.33%	8.33%	8.33%	8.33%	8.33%	8.33%	8.33%	8.33%	8.33%	8.33%	8.33%		100.00%
Quercus marilandica	1.00	8.33%	8.33%	8.33%	8.33%	8.33%	8.33%	8.33%	8.33%	8.33%	8.33%	8.33%	8.33%		100.00%
Quercus prinus	10.00	83.33%	83.33%	83.33%	83.33%	83.33%	83.33%	83.33%	83.33%	83.33%	83.33%	83.33%	83.33%		1000.00%
Quercus rubra	11.00	91.67%	91.67%	91.67%	91.67%	91.67%	91.67%	91.67%	91.67%	91.67%	91.67%	91.67%	91.67%		1100.00%
Rhododendron maximum	5.00	41.67%	41.67%	41.67%	41.67%	41.67%	41.67%	41.67%	41.67%	41.67%	41.67%	41.67%	41.67%		500.00%
Sassafras albidum	2.00	16.67%	16.67%	16.67%	16.67%	16.67%	16.67%	16.67%	16.67%	16.67%	16.67%	16.67%	16.67%		200.00%
Tilia americana	1.00	8.33%	8.33%	8.33%	8.33%	8.33%	8.33%	8.33%	8.33%	8.33%	8.33%	8.33%	8.33%		100.00%
Tsuga canadensis	8.00	66.67%	66.67%	66.67%	66.67%	66.67%	66.67%	66.67%	66.67%	66.67%	66.67%	66.67%	66.67%		800.00%
Ulmus rubra	1.00	8.33%	8.33%	8.33%	8.33%	8.33%	8.33%	8.33%	8.33%	8.33%	8.33%	8.33%	8.33%		100.00%
															0.00%
		7.58	7.58	7.58	7.58	7.58	7.58	7.58	7.58	7.58	7.58	7.58	7.58		9100.00%

RELATIVE FREQUENCY															
		Quadrats													
Species		1	2	3	4	5	6	7	8	9	10	11	12		
Numer of Points		12													
Absolute Frequency															
		Frequency													
		of a Species													
Acer negundo		1.10%	1.10%	1.10%	1.10%	1.10%	1.10%	1.10%	1.10%	1.10%	1.10%	1.10%	1.10%		13.19%
Acer pennsylvanica		2.20%	2.20%	2.20%	2.20%	2.20%	2.20%	2.20%	2.20%	2.20%	2.20%	2.20%	2.20%		26.37%
Acer rubrum		6.59%	6.59%	6.59%	6.59%	6.59%	6.59%	6.59%	6.59%	6.59%	6.59%	6.59%	6.59%		79.12%
Acer sacharum		7.69%	7.69%	7.69%	7.69%	7.69%	7.69%	7.69%	7.69%	7.69%	7.69%	7.69%	7.69%		92.31%
Amelanchier arborea		6.59%	6.59%	6.59%	6.59%	6.59%	6.59%	6.59%	6.59%	6.59%	6.59%	6.59%	6.59%		79.12%
Betula lenta		10.99%	10.99%	10.99%	10.99%	10.99%	10.99%	10.99%	10.99%	10.99%	10.99%	10.99%	10.99%		131.87%
Betula nigra		1.10%	1.10%	1.10%	1.10%	1.10%	1.10%	1.10%	1.10%	1.10%	1.10%	1.10%	1.10%		13.19%
Betula populifolia		1.10%	1.10%	1.10%	1.10%	1.10%	1.10%	1.10%	1.10%	1.10%	1.10%	1.10%	1.10%		13.19%
Carya glabra		3.30%	3.30%	3.30%	3.30%	3.30%	3.30%	3.30%	3.30%	3.30%	3.30%	3.30%	3.30%		39.56%
Cornus florida		2.20%	2.20%	2.20%	2.20%	2.20%	2.20%	2.20%	2.20%	2.20%	2.20%	2.20%	2.20%		26.37%
Fagus grandifolia		1.10%	1.10%	1.10%	1.10%	1.10%	1.10%	1.10%	1.10%	1.10%	1.10%	1.10%	1.10%		13.19%
Fraxinus americana		2.20%	2.20%	2.20%	2.20%	2.20%	2.20%	2.20%	2.20%	2.20%	2.20%	2.20%	2.20%		26.37%
Hamamelis virginiana		2.20%	2.20%	2.20%	2.20%	2.20%	2.20%	2.20%	2.20%	2.20%	2.20%	2.20%	2.20%		26.37%
Juniperous virginiana		1.10%	1.10%	1.10%	1.10%	1.10%	1.10%	1.10%	1.10%	1.10%	1.10%	1.10%	1.10%		13.19%
Kalmia latifolia		2.20%	2.20%	2.20%	2.20%	2.20%	2.20%	2.20%	2.20%	2.20%	2.20%	2.20%	2.20%		26.37%
Liriodendron tulipifera		2.20%	2.20%	2.20%	2.20%	2.20%	2.20%	2.20%	2.20%	2.20%	2.20%	2.20%	2.20%		26.37%
Nyssa sylvatica		2.20%	2.20%	2.20%	2.20%	2.20%	2.20%	2.20%	2.20%	2.20%	2.20%	2.20%	2.20%		26.37%
Pinus rigida		1.10%	1.10%	1.10%	1.10%	1.10%	1.10%	1.10%	1.10%	1.10%	1.10%	1.10%	1.10%		13.19%
Prunus serotina		1.10%	1.10%	1.10%	1.10%	1.10%	1.10%	1.10%	1.10%	1.10%	1.10%	1.10%	1.10%		13.19%
Quercus alba		1.10%	1.10%	1.10%	1.10%	1.10%	1.10%	1.10%	1.10%	1.10%	1.10%	1.10%	1.10%		13.19%
Quercus marilandica		1.10%	1.10%	1.10%	1.10%	1.10%	1.10%	1.10%	1.10%	1.10%	1.10%	1.10%	1.10%		13.19%
Quercus prinus		10.99%	10.99%	10.99%	10.99%	10.99%	10.99%	10.99%	10.99%	10.99%	10.99%	10.99%	10.99%		131.87%
Quercus rubra		12.09%	12.09%	12.09%	12.09%	12.09%	12.09%	12.09%	12.09%	12.09%	12.09%	12.09%	12.09%		145.05%
Rhododendron maximum		5.49%	5.49%	5.49%	5.49%	5.49%	5.49%	5.49%	5.49%	5.49%	5.49%	5.49%	5.49%		65.93%
Sassafras albidum		2.20%	2.20%	2.20%	2.20%	2.20%	2.20%	2.20%	2.20%	2.20%	2.20%	2.20%	2.20%		26.37%
Tilia americana		1.10%	1.10%	1.10%	1.10%	1.10%	1.10%	1.10%	1.10%	1.10%	1.10%	1.10%	1.10%		13.19%
Tsuga canadensis		8.79%	8.79%	8.79%	8.79%	8.79%	8.79%	8.79%	8.79%	8.79%	8.79%	8.79%	8.79%		105.49%
Ulmus rubra		1.10%	1.10%	1.10%	1.10%	1.10%	1.10%	1.10%	1.10%	1.10%	1.10%	1.10%	1.10%		13.19%
		100.00%	100.00%	100.00%	100.00%	100.00%	100.00%	100.00%	100.00%	100.00%	100.00%	100.00%	100.00%		1200.00%

TABLE 5. IMPORTANCE VALUE

		Quadrats												
Species		1		3	4	5	6	7	8	9	10	11	12		
Numer of Points		12													
Acer negundo		0.01	0.01	0.01	0.01	0.01	0.01	0.01	0.01	0.14	0.01	0.01	0.01		26.3%
Acer pennsylvanica		0.02	0.02	0.02	0.02	0.02	0.10	0.02	0.02	0.19	0.02	0.02	0.02		50.7%
Acer rubrum		0.40	0.19	0.21	0.07	0.07	0.07	0.44	0.47	0.07	0.07	0.07	0.15		226.4%
Acer sacharum		0.08	0.14	0.08	0.17	0.49	0.12	0.45	0.09	0.14	0.08	0.08	0.08		198.8%
Amelanchier arborea		0.12	0.07	0.07	0.29	0.07	0.11	0.16	0.09	0.07	0.11	0.07	0.07		127.4%
Betula lenta		0.32	0.37	0.54	0.17	1.17	0.91	0.11	0.12	0.31	0.29	1.98	0.11		639.6%
Betula nigra		0.01	0.01	0.01	0.01	0.01	0.01	0.01	0.01	0.50	0.01	0.01	0.01		62.2%
Betula populifolia		0.01	0.01	0.01	0.01	0.01	0.01	0.01	0.01	0.01	0.10	0.01	0.01		22.1%
Carya glabra		0.03	0.14	0.03	0.03	0.03	0.03	0.03	0.05	0.03	0.12	0.03	0.03		60.5%
Cornus florida		0.02	0.02	0.02	0.02	0.02	0.02	0.02	0.02	0.02	0.11	0.02	0.06		39.4%
Fagus grandifolia		0.01	0.01	0.01	0.01	0.31	0.01	0.01	0.01	0.01	0.01	0.01	0.01		42.6%
Fraxinus americana		0.02	0.04	0.02	0.02	0.02	0.02	0.02	0.02	0.05	0.02	0.02	0.02		31.8%
Hamamelis virginiana		0.02	0.02	0.05	0.02	0.02	0.02	0.02	0.02	0.09	0.02	0.02	0.02		36.1%
Juniperous virginiana		0.01	0.03	0.01	0.01	0.01	0.01	0.01	0.01	0.01	0.01	0.01	0.01		15.3%
Kalmia latifolia		0.02	0.02	0.02	0.02	0.02	0.02	0.12	0.22	0.02	0.02	0.02	0.02		55.4%
Liriodendron tulipifera		0.02	0.02	0.02	0.02	0.02	0.02	0.02	0.02	0.09	0.07	0.02	0.02		37.4%
Nyssa sylvatica		0.02	0.02	0.02	0.02	0.02	0.02	0.15	0.02	0.02	0.02	0.04	0.02		40.6%
Pinus rigida		0.01	0.01	0.01	0.01	0.01	0.01	0.01	0.01	0.01	0.01	0.02	0.01		14.0%
Prunus serotina		0.01	0.18	0.01	0.01	0.01	0.01	0.01	0.01	0.01	0.01	0.01	0.01		30.4%
Quercus alba		0.01	0.01	0.01	0.01	0.01	0.01	0.01	0.01	0.01	0.23	0.01	0.01		35.4%
Quercus marilandica		0.01	0.01	0.01	0.01	0.01	0.01	0.01	0.01	0.01	0.19	0.01	0.01		31.0%
Quercus prinus		1.08	1.12	0.35	0.62	0.11	0.87	0.80	0.41	0.11	0.69	0.16	0.40		671.8%
Quercus rubra		0.27	0.34	0.17	0.22	0.30	0.24	0.31	0.24	0.12	0.61	0.15	0.41		336.6%
Rhododendron maximum		0.05	0.05	0.61	0.05	0.05	0.17	0.05	0.96	0.64	0.05	0.05	0.93		370.4%
Sassafras albidum		0.02	0.02	0.02	0.02	0.02	0.02	0.08	0.04	0.02	0.02	0.02	0.02		33.9%
Tilia americana		0.01	0.01	0.01	0.01	0.01	0.01	0.01	0.01	0.04	0.01	0.01	0.01		16.5%
Tsuga canadensis		0.37	0.09	0.63	1.10	0.15	0.13	0.09	0.09	0.19	0.09	0.11	0.50		353.4%
Ulmus rubra		0.01	0.01	0.01	0.01	0.01	0.01	0.01	0.01	0.16	0.01	0.01	0.01		27.7%
		3.00	3.00	3.00	3.00	3.00	3.00	3.00	3.00	2.80	3.00	3.00	3.00		3579.7%

APPENDIX D

LIST OF SPECIES AND INDICATOR STATUS

Vegetation Observations

Observation station NPPAQQ1

Scientific Name	Common Name	Region 1 Ind Status
Trees		
Tsuga canadensis	Eastern hemlock	FACU
Amelanchier arborea	Downy service-berry	FAC-
Betula lenta	Sweet birch	FACU
Quercus rubra	Northern red oak	FACU-
Acer rubrum	Red maple	FAC
Quercus prinus	Chestnut oak	UPL
Saplings		
Tsuga canadensis	Eastern hemlock	FACU
Shrubs		
Vaccinium corymbosum	Highbush blueberry	FACW-
Vaccinium angustifolium	Lowbush blueberry	FACU-
Herbaceous		
Graminaceae sp.	Grass species	NS

Vegetation Observations

Observation station NPPAQQ2

Scientific Name	Common Name	Region 1 Ind Status
Trees		
Amelanchier arborea	Downy service-berry	FAC-
Tsuga canadensis	Eastern hemlock	FACU
Fraxinus americana	White ash	FACU
Quercus prinus	Chestnut oak	UPL
Acer saccharum	Sugar maple	FACU-
Acer rubrum	Red maple	FAC
Carya glabra	Sweet pignut hickory	FACU-
Prunus serotina	Black cherry	FACU
Betula lenta	Sweet birch	FACU
Quercus rubra	Northern red oak	FACU-
Saplings		
Tsuga canadensis	Eastern hemlock	FACU
Juniperus virginiana	Eastern red cedar	FACU
Pinus strobus	Eastern white pine	FACU
Herbaceous		
Epigaea repens	Common mayflower	NL
Graminaceae sp.	Grass species	NS
Lycopodium lucidulum	Shining clubmoss	FACW-
Osmunda cinnamomea	Cinnamon fern	FACW

Vegetation Observations

Observation station NPPAQQ3

Scientific Name	Common Name	Region 1 Ind Status
Trees		
Quercus rubra	Northern red oak	FACU-
Acer rubrum	Red maple	FAC
Quercus prinus	Chestnut oak	UPL
Betula lenta	Sweet birch	FACU
Tsuga canadensis	Eastern hemlock	FACU
Shrubs		
Vaccinium angustifolium	Lowbush blueberry	FACU-
Hamamelis virginiana	American witch-hazel	FAC-
Rhododendron maximum	Rosebay rhododendron	FAC
Herbaceous		
Betula lenta	Sweet birch	FACU

Vegetation Observations

Observation station NPPAQQ4

Scientific Name	Common Name	Region 1 Ind Status
Trees		
Acer rubrum	Red maple	FAC
Acer saccharum	Sugar maple	FACU-
Betula lenta	Sweet birch	FACU
Quercus rubra	Northern red oak	FACU-
Quercus prinus	Chestnut oak	UPL
Tsuga canadensis	Eastern hemlock	FACU
Shrubs		
Amelanchier arborea	Downy service-berry	FAC-
Herbaceous		
Graminaceae sp.	Grass species	NS
Osmunda cinnamomea	Cinnamon fern	FACW
Polystichum acrostichoides	Christmas fern	FACU-

Vegetation Observations

Observation station NPPAQQ5

Scientific Name	Common Name	Region 1 Ind Status
Trees		
Tsuga canadensis	Eastern hemlock	FACU
Fagus grandifolia	American beech	FACU
Quercus rubra	Northern red oak	FACU-
Acer saccharum	Sugar maple	FACU-
Betula lenta	Sweet birch	FACU
Shrubs		
Berberis thunbergii	Japanese barberry	FACU

Vegetation Observations

Observation station NPPAQQ6

Scientific Name	Common Name	Region 1 Ind Status
Trees		
Tsuga canadensis	Eastern hemlock	FACU
Acer pensylvanicum	Striped maple	FACU
Acer rubrum	Red maple	FAC
Acer saccharum	Sugar maple	FACU-
Amelanchier arborea	Downy service-berry	FAC-
Betula lenta	Sweet birch	FACU
Quercus prinus	Chestnut oak	UPL
Quercus rubra	Northern red oak	FACU-
Shrubs		
Rhododendron maximum	Rosebay rhododendron	FAC
Herbaceous		
Athyrium filix-femina	Subarctic lady fern	FAC
Betula lenta	Sweet birch	FACU

Vegetation Observations

Observation station NPPAQQ7

Scientific Name	Common Name	Region 1 Ind Status
Trees		
Quercus alba	White oak	FACU-
Sassafras albidum	Sassafras	FACU-
Nyssa sylvatica	Black gum	FAC
Nyssa sylvatica	Swamp tupelo	FACW+
Amelanchier arborea	Downy service-berry	FAC-
Acer saccharum	Sugar maple	FACU-
Acer rubrum	Red maple	FAC
Quercus rubra	Northern red oak	FACU-
Quercus prinus	Chestnut oak	UPL
Saplings		
Kalmia latifolia	Mountain laurel	FACU
Shrubs		
Ilex verticillata	Common winterberry	FACW+
Vaccinium angustifolium	Lowbush blueberry	FACU-
Kalmia latifolia	Mountain laurel	FACU
Herbaceous		
Tsuga canadensis	Eastern hemlock	FACU

Vegetation Observations

Observation station NPPAQQ8

Scientific Name	Common Name	Region 1 Ind Status
Trees		
Acer saccharum	Sugar maple	FACU-
Carya glabra	Sweet pignut hickory	FACU-
Sassafras albidum	Sassafras	FACU-
Amelanchier arborea	Downy service-berry	FAC-
Betula lenta	Sweet birch	FACU
Quercus rubra	Northern red oak	FACU-
Acer rubrum	Red maple	FAC
Quercus prinus	Chestnut oak	UPL
Shrubs		
Vaccinium angustifolium	Lowbush blueberry	FACU-
Kalmia latifolia	Mountain laurel	FACU
Rhododendron maximum	Rosebay rhododendron	FAC
Herbaceous		
Tsuga canadensis	Eastern hemlock	FACU

Vegetation Observations

Observation station NPPAQQ9

Scientific Name	Common Name	Region 1 Ind Status
Trees		
Acer rubrum	Red maple	FAC
Liriodendron tulipifera	Tulip tree	FACU
Tilia americana	American basswood	FACU
Acer saccharum	Sugar maple	FACU-
Acer pensylvanicum	Striped maple	FACU
Acer negundo	Box-elder	FAC+
Fraxinus americana	White ash	FACU
Betula nigra	River birch	FACW
Tsuga canadensis	Eastern hemlock	FACU
Ulmus rubra	Slippery elm	FAC
Betula lenta	Sweet birch	FACU
Saplings		
Betula nigra	River birch	FACW
Hamamelis virginiana	American witch-hazel	FAC-
Shrubs		
Hamamelis virginiana	American witch-hazel	FAC-
Rubus allegheniensis	Allegheny blackberry	FACU-
Rhododendron maximum	Rosebay rhododendron	FAC
Vines		
Vitis sp.	Grape species	NS
Herbaceous		
Osmunda cinnamomea	Cinnamon fern	FACW
Polystichum acrostichoides	Christmas fern	FACU-
Athyrium filix-femina	Subarctic lady fern	FAC

Vegetation Observations

Observation station NPPAQQ10

Scientific Name	Common Name	Region 1 Ind Status
Trees		
Acer rubrum	Red maple	FAC
Cornus florida	Flowering dogwood	FACU-
Amelanchier arborea	Downy service-berry	FAC-
Betula lenta	Sweet birch	FACU
Carya glabra	Sweet pignut hickory	FACU-
Quercus marilandica	Black Jack oak	NL
Quercus alba	White oak	FACU-
Quercus rubra	Northern red oak	FACU-
Quercus prinus	Chestnut oak	UPL
Shrubs		
Kalmia latifolia	Mountain laurel	FACU
Vaccinium angustifolium	Lowbush blueberry	FACU-

Vegetation Observations

Observation station NPPAQQ11

Scientific Name	Common Name	Region 1 Ind Status
Trees		
Tsuga canadensis	Eastern hemlock	FACU
Betula populifolia	Gray birch	FAC
Pinus rigida	Pitch pine	FACU
Nyssa sylvatica	Black gum	FAC
Nyssa sylvatica	Swamp tupelo	FACW+
Quercus rubra	Northern red oak	FACU-
Quercus prinus	Chestnut oak	UPL
Betula lenta	Sweet birch	FACU
Saplings		
Betula lenta	Sweet birch	FACU

Vegetation Observations

Observation station NPPAQQ12

Scientific Name	Common Name	Region 1 Ind Status
Trees		
Cornus florida	Flowering dogwood	FACU-
Betula lenta	Sweet birch	FACU
Acer rubrum	Red maple	FAC
Tsuga canadensis	Eastern hemlock	FACU
Quercus rubra	Northern red oak	FACU-
Quercus prinus	Chestnut oak	UPL
Shrubs		
Rhododendron maximum	Rosebay rhododendron	FAC
Herbaceous		
Athyrium filix-femina	Subarctic lady fern	FAC

Vegetation Observations

(MW)

Observation station NPPAQ01

Scientific Name	Common Name	Region 1 Ind Status
Trees		
Acer saccharum	Sugar maple	FACU-
Juglans cinerea	Butternut	FACU+
Saplings		
Acer saccharum	Sugar maple	FACU-
Shrubs		
Lonicera tatarica	Tartarian honeysuckle	FACU*
Herbaceous		
Arisaema triphyllum	Swamp jack-in-the-pulpit	FACW-
Eulalia viminea	Nepal microstegium	FAC
Rubus allegheniensis	Allegheny blackberry	FACU-

Vegetation Observations

(MK)

Observation station NPPAQ02

Scientific Name	Common Name	Region 1 Ind Status
Trees		
Celtis occidentalis	Common hackberry	FACU
Ulmus americana	American elm	FACW-
Betula lenta	Sweet birch	FACU
Liriodendron tulipifera	Tulip tree	FACU
Fraxinus americana	White ash	FACU
Acer saccharum	Sugar maple	FACU-
Saplings		
Betula lenta	Sweet birch	FACU
Acer saccharum	Sugar maple	FACU-
Vines		
Parthenocissus quinquefolia	Virginia creeper	FACU
Toxicodendron radicans	Poison ivy	FAC
Herbaceous		
Impatiens capensis	Spotted touch-me-not	FACW
Berberis thunbergii	Japanese barberry	FACU

Vegetation Observations

(MH/R...)

Observation station NPPAQ04

Scientific Name	Common Name	Region 1 Ind Status
Trees		
Acer saccharum	Sugar maple	FACU-
Betula lenta	Sweet birch	FACU
Tsuga canadensis	Eastern hemlock	FACU
Quercus rubra	Northern red oak	FACU-
Quercus prinus	Chestnut oak	UPL
Shrubs		
Rhododendron maximum	Rosebay rhododendron	FAC
Herbaceous		
Athyrium filix-femina	Subarctic lady fern	FAC
Polystichum acrostichoides	Christmas fern	FACU-
Solidago sp.	Golden-rod species	NS

Vegetation Observations

(MH, RH)

Observation station NPPAQ05

Scientific Name	Common Name	Region 1 Ind Status
Trees		
Quercus rubra	Northern red oak	FACU-
Ulmus rubra	Slippery elm	FAC
Tilia americana	American basswood	FACU
Fraxinus americana	White ash	FACU
Acer saccharum	Sugar maple	FACU-
Betula lenta	Sweet birch	FACU
Saplings		
Acer saccharum	Sugar maple	FACU-
Shrubs		
Hamamelis virginiana	American witch-hazel	FAC-
Rhododendron maximum	Rosebay rhododendron	FAC
Herbaceous		
Arisaema triphyllum	Swamp jack-in-the-pulpit	FACW-
Geum canadense	White avens	FACU
Athyrium filix-femina	Subarctic lady fern	FAC
Polystichum acrostichoides	Christmas fern	FACU-

Vegetation Observations

Observation station NPPAQ06

Scientific Name	Common Name	Region 1 Ind Status
Trees		
Quercus rubra	Northern red oak	FACU-
Betula nigra	River birch	FACW
Quercus prinus	Chestnut oak	UPL
Saplings		
Betula lenta	Sweet birch	FACU
Sassafras albidum	Sassafras	FACU-
Shrubs		
Rhododendron maximum	Rosebay rhododendron	FAC
Herbaceous		
Athyrium filix-femina	Subarctic lady fern	FAC

Vegetation Observations

Observation station NPPAQ08

Scientific Name	Common Name	Region 1 Ind Status
Trees		
Betula lenta	Sweet birch	FACU
Tsuga canadensis	Eastern hemlock	FACU

Vegetation Observations

Observation station NPPAQ09

Scientific Name	Common Name	Region 1 Ind Status
Trees		
Tsuga canadensis	Eastern hemlock	FACU
Saplings		
Acer pensylvanicum	Striped maple	FACU
Betula lenta	Sweet birch	FACU
Shrubs		
Rhododendron maximum	Rosebay rhododendron	FAC
Herbaceous		
Athyrium filix-femina	Subarctic lady fern	FAC

Vegetation Observations

Observation station NPPAQ10

Scientific Name	Common Name	Region 1 Ind Status
Trees		
Betula lenta	Sweet birch	FACU
Quercus prinus	Chestnut oak	UPL
Tsuga canadensis	Eastern hemlock	FACU
Saplings		
Betula lenta	Sweet birch	FACU
Tsuga canadensis	Eastern hemlock	FACU
Shrubs		
Rubus flagellaris	Northern dewberry	UPL
Rhododendron maximum	Rosebay rhododendron	FAC
Herbaceous		
Athyrium filix-femina	Subarctic lady fern	FAC

Vegetation Observations

Observation station NPPAQ11

Scientific Name	Common Name	Region 1 Ind Status
Trees		
Quercus rubra	Northern red oak	FACU-
Quercus prinus	Chestnut oak	UPL
Tsuga canadensis	Eastern hemlock	FACU
Saplings		
Quercus prinus	Chestnut oak	UPL
Tsuga canadensis	Eastern hemlock	FACU
Betula lenta	Sweet birch	FACU
Shrubs		
Rhododendron maximum	Rosebay rhododendron	FAC
Herbaceous		
Athyrium filix-femina	Subarctic lady fern	FAC

Vegetation Observations

Observation station NPPAQ12

Scientific Name	Common Name	Region 1 Ind Status
Trees		
Carya glabra	Sweet pignut hickory	FACU-
Betula lenta	Sweet birch	FACU
Tilia americana	American basswood	FACU
Shrubs		
Rhododendron maximum	Rosebay rhododendron	FAC
Rubus flagellaris	Northern dewberry	UPL
Herbaceous		
Polystichum acrostichoides	Christmas fern	FACU-
Athyrium filix-femina	Subarctic lady fern	FAC

APPENDIX E

SOIL NUTRIENT DATA

PORT NUMBER

R361-051

A & L EASTERN AGRICULTURAL LABORATORIES, INC.

7621 Whitepine Road • Richmond, Virginia 23237 • (804) 743-9401
Fax No. (804) 271-6446

ACCT # 35238

SEND TO: COASTAL ENVIRONMENTAL
BILL BAMKA
2 RESEARCH WAY
PRINCETON NJ 08540

GROWER: COASTAL ENVIRON

SAMPLES SUBMITTED BY: COASTAL ENVIRONMENTAL

DATE OF REPORT 12/28/93 PAGE 1

SOIL ANALYSIS REPORT

DATE RECEIVED 12/23/93
DATE OF ANALYSIS 12/27/93

SAMPLE NUMBER	LAB NUMBER	ORGANIC MATTER RATE	ORGANIC MATTER ENR lbs./A	PHOSPHORUS P1 (Weak Bray) ppm-P RATE	PHOSPHORUS P2 N_aHCO_3-P ppm-P RATE	POTASSIUM K ppm-K RATE	MAGNESIUM ppm-Mg RATE	CALCIUM ppm-Ca RATE	SULFUR ppm-S RATE	pH SOIL pH	pH BUFFER pH	HYDROGEN H meq/100g	Cation Exchange Capacity C.E.C. meq/100g	PERCENT BASE SATURATION (COMPUTED) % K	% Mg	% Ca	% H	% Na
1	11117	2.1	68L	56 VH	76 VH	32 VL	13 VL	40 VL		4.7	6.2	6.9	7.3	1.1	1.5	2.7	94.6	
2	11118	4.0	106H	24 M	27 M	42 VL	24 VL	30 VL		4.3	5.8	11.0	11.5	0.9	1.7	1.3	96.0	
3	11119	4.4	129VH	46 VH	52 H	26 VL	20 VL	50 VL		4.7	6.3	6.4	6.9	1.0	2.4	3.6	93.0	
4	11120	3.3	92M	15 L	18 L	27 VL	7 VL	30 VL		4.5	6.0	9.3	9.6	0.7	0.6	1.6	97.1	
5	11121	1.0	71L	34 H	44 H	17 VL	8 VL	40 VL		4.8	6.7	2.1	2.4	1.8	2.8	8.3	87.1	

(SEE EXPLANATION ON BACK)

SAMPLE NUMBER	NITRATE NO_3 ppm-NO_3-N RATE	SULFUR S ppm-S RATE	ZINC Zn ppm-Zn RATE	MANGANESE Mn ppm-Mn RATE	IRON Fe ppm-Fe RATE	COPPER Cu ppm-Cu RATE	BORON B ppm-B RATE	EXCESS LIME RATE	SOLUBLE SALTS ppm RATE	CHLORIDE Cl ppm-Cl RATE	MOLYBDENUM Mo ppm-Mo RATE	PARTICAL SIZE ANALYSIS % SAND	% SILT	% CLAY	SOIL TEXTURE

This report applies only to the sample(s) tested. Samples are retained a maximum of thirty days after testing.

A & L EASTERN AGRICULTURAL LABORATORIES, INC.

BY C. NORMAN JONES

PORT NUMBER

R361-051

A & L EASTERN AGRICULTURAL LABORATORIES, INC.

7621 Whitepine Road • Richmond, Virginia 23237 • (804) 743-9401
Fax No. (804) 271-6446

ACCT # 35238

SAMPLES SUBMITTED BY: COASTAL ENVIRONMENTAL

SEND TO: COASTAL ENVIRONMENTAL
BILL BAMKA
2 RESEARCH WAY
PRINCETON NJ 08540

GROWER COASTAL ENVIRON

DATE RECEIVED 12/23/93
DATE OF ANALYSIS 12/27/93

TE OF REPORT 12/28/93 PAGE 2

SOIL ANALYSIS REPORT

SAMPLE NUMBER	LAB NUMBER	ORGANIC MATTER %	ORGANIC MATTER RATE	ORGANIC MATTER ENR lbs./A	PHOSPHORUS P1 (Weak Bray) ppm-P	PHOSPHORUS RATE	PHOSPHORUS P2 $NaHCO_3$-P ppm-P	PHOSPHORUS RATE	POTASSIUM K ppm-K	POTASSIUM RATE	MAGNESIUM ppm-Mg	MAGNESIUM RATE	CALCIUM ppm-Ca	CALCIUM RATE	ppm-Na	ppm-Na RATE	SOIL pH	BUFFER pH	HYDROGEN H meq/100g	Cation Exchange Capacity C.E.C. meq/100g	PERCENT BASE SATURATION (COMPUTED) % K	% Mg	% Ca	% H	% Na
37	11122	2.7		80M	6	VL	8	VL	23	VL	7	VL	20	VL			4.2	5.8	11.7	11.9	0.5	0.5	0.8	98.2	
38	11123	3.1		88M	19	M	22	L	33	VL	9	VL	30	VL			4.3	6.1	8.8	9.1	0.9	0.8	1.6	96.6	

(SEE EXPLANATION ON BACK)

SAMPLE NUMBER	NITRATE NO_3 ppm-NO_3-N	RATE	SULFUR S ppm-S	RATE	ZINC Zn ppm-Zn	RATE	MANGANESE Mn ppm-Mn	RATE	IRON Fe ppm-Fe	RATE	ppm-Mn	ppm-B	RATE	ppm-Cu	RATE	CHLORIDE Cl ppm-Cl	RATE	MOLYBDENUM Mo ppm-Mo	RATE	PARTICAL SIZE ANALYSIS % SAND	% SILT	% CLAY	SOIL TEXTURE

This report applies only to the sample(s) tested. Samples are retained a maximum of thirty days after testing.

A & L EASTERN AGRICULTURAL LABORATORIES, INC.

BY C. NORMAN JONES

MULTIPLY THE RESULTS IN ppm BY 4.6 TO CONVERT TO LBS. PER ACRE P_2O_5

APPENDIX F

PER CENT SIMILARITY

TABLE 6 % SIMILARILITY COEFFICIENT AMONG SELECTED VEGETATION QUADRATS

	1	2	4	6	7	8
Percent Similarility		72.8	50.2	21.2	61.5	39.7
Jaccaro Coefficient		0.364	0.714	0.429	0.4	0.455
Percent Similarility	2		36.2	25	55.8	29.3
Jaccaro Coefficient			0.364	0.273	0.4	0.462
Percent Similarility	4			15.6	39.6	22.4
Jaccaro Coefficient				0.571	0.4	0.455
Percent Similarility	5				34.2	19.5
Jaccaro Coefficient					0.3	0.18
Percent Similarility	7					0.47
Jaccaro Coefficient						0.636

APPENDIX G

VEGETATION MAP

Map not included

APPENDIX J

Stein, Raymond, J. "A Rare Fauna/Habitat Survey of the Pahaquarry Copper Mines Development Site in the Delaware Water Gap National Recreation Area, Pahaquarry Township, Warren County, New Jersey." Far Hills, N.J.: Prepared for the National Park Service by Biostar Associates, Inc., September 1993.

Biostar Associates, Inc.

ENVIRONMENTAL CONSULTANTS

(908) 234-0870

RAYMOND J. STEIN
PRESIDENT

884 OLD CHESTER ROAD
FAR HILLS, N.J. 07931

A RARE FAUNA/HABITAT SURVEY

OF THE PAHAQUARRY COPPER MINES DEVELOPMENT SITE

IN THE DELAWARE WATER GAP NATIONAL RECREATION AREA,

PAHAQUARRY TOWNSHIP, WARREN COUNTY, NEW JERSEY

Prepared for

National Park Service

by

Raymond J. Stein

September, 1993

NPS CONTRACT OM(S)
ORDER #1443 PX432093A82

Introduction

During June, 1993, Biostar Associates, Inc. conducted a rare fauna/habitat survey of the Pahaquarry Copper Mines development site in the Delaware Water Gap National Recreation Area (DWGNRA), Pahaquarry Township, Warren County, New Jersey. The investigation, performed at the request of National Park Service, included searches of woodlands, mines, and stream for the purpose of detecting any federal or state protected species of vertebrates or invertebrates and/or their related critical habitats. The study was made by three staff members at various times on June 11, 17, 24, and 29.

One state threatened salamander, and another salamander currently state classified as declining, were located on the site.

Overview of property

The Pahaquarry property (see map, Appendix I) features a mesic upland hemlock-mixed hardwood forest that follows a stream through a steep shale slope to the Delaware River below. Although somewhat fragmented by old building foundations and related clearings that are now overgrown with vegetation, the forested area is made up of a typical mix of hemlock, sweet and yellow birch, basswood, beech, ash, red oak, sugar maple, and red maple trees. From the stream and the hiking trails that run through the woods, one can see evidence of hemlock infestation by the woolly adelgid, Adelges tsugae, that may alter the forest situation in the near future.

A reduction in shade resulting from hemlock dieoff could also increase the brook's temperature and drastically alter that habitat as well. At present its waters harbor crayfish and frogs and present ideal conditions for macroinvertebrates and five species of salamanders that feed on them. The fast running

stream drops almost 800 feet in elevation during its one mile run to the river.

In addition to the wooded area and the brook, the upland region contains two old mine tunnels that could potentially be utilized as terrestrial cave habitat despite the facts that the tunnels were found to be predominantly dry, and are not deep enough to have zones of permanent darkness. Only spiders and cave crickets were found during the survey inspections. The entrances to the mines are currently boarded over, but have small doors that permit public access.

The remaining portion of the site, located on the northwestern side of Old Mine Road, contains a grass and dirt parking area with surrounding stands of hardwoods, plus the lower stretch of the stream that flows to its meeting with the river.

A list of vertebrate species sited during the survey may be found in Appendix II.

Invertebrates

In a search for the federal and state endangered American burying beetle, Nicrophorus americanus, two traps were placed in appropriate locations for a total of eight trap days. Captured were 21 carrion beetles and 3 rove beetles in addition to two species of burying beetles (6 specimens), which did not include the looked-for Nicrophorus. Suitable habitat for Mitchell's satyr, Neonympha mitchellii, is not present on the property.

Rare vertebrates

One specimen of the threatened long-tailed salamander, Eurycea longicauda, was found on the study site. The salamander was discovered in leaves sandwiched between two large slabs of shale that overhang the brook in a steep open area several hundred feet southeast of tunnel #1. Long-tails, although mainly terrestrial, are almost always associated with streams, limestone ponds and sinks, wet caves, seeps, or other moist

places. The hemlock slope/stream habitat could be assessed as good.

The northern spring salamander, Gyrinophilus porphyriticus, a somewhat aggressive species that usually frequents clear upland springs and streams, was sited in a lower section of the same stream just a bit to the south of Old Mine Road. Now considered to be declining by the New Jersey Department of Environmental Protection and Energy, the species is found rather regularly in the DWGNRA, but is difficult to locate elsewhere in the state.

Although no New Jersey-classified rare birds were seen at the Pahaquarry site during Biostar's survey, it is pertinent to note that four species that the New Jersey Audubon Society reports to be declining in the state, because of the vast reduction in woodland habitat, were found on the property. These included the ovenbird, Seiurus aurocapillus; the red-eyed vireo, Vireo olivaceus; the wood thrush, Hylocichla mustelina; and the scarlet tanager, Piranga olivacea. The June sitings would indicate that all four species were, in all probability, nesting there.

Recommendation for mines

Consideration of gating the mine entrances in the manner of the Army Corps of Engineers test tunnel, located about two and one-half miles south on the same western slope of Kittatinny Mountain, is suggested. The cave-like mines could provide resting and hibernation quarters for several species of bats, possibly including the endangered Indiana myotis, Myotis sodalis. The gate on the Army Corps tunnel exemplifies a type that allows space for proper ingress and egress of bats and other small animals. A publication by Hunt and Stitt entitled Cave Gating: A Handbook (available from the National Speleological Society, Inc., Cave Avenue, Huntsville, Alabama 35810) discusses an alternative type of gate (see Appendix III) that also allows for bat usage of caves and reduces human accessibility, thereby controlling vandalism, litter, and

potential hazards. Inasmuch as the mines serve no present purpose, such methods of encouraging their utilization by wildlife are recommemded.

Appendix I

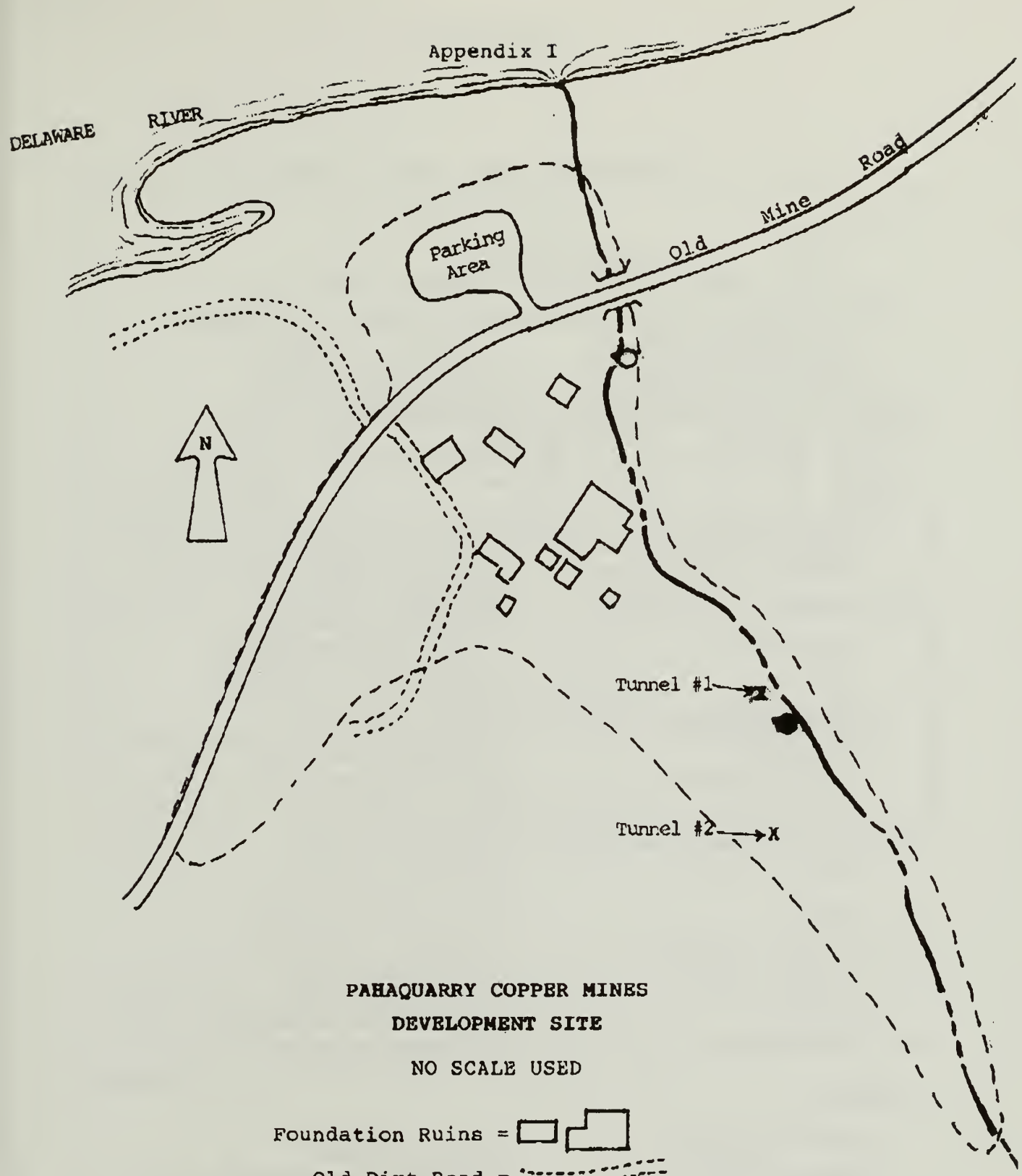

PAHAQUARRY COPPER MINES

DEVELOPMENT SITE

NO SCALE USED

Foundation Ruins =

Old Dirt Road =

Long-tailed Salamander = ●

Spring Salamander = O

Stream =

Appendix II

VERTEBRATES SITED DURING SURVEY

Amphibians:

Northern dusky salamander	Desmognathus fuscus
D Northern spring salamander	Gyrinophilus porphyriticus
Red-backed salamander	Plethodon cinereus
Two-lined salamander	Eurycea bislineata
T Long-tailed salamander	Eurycea longicauda
Pickerel frog	Rana palustris

Birds:

Common flicker	Colaptes auratus
Red-bellied woodpecker	Centurus carolinus
Blue jay	Cyanocitta cristata
Common crow	Corvus brachyrhynchos
Catbird	Dumetella carolinensis
American robin	Turdus migratorius
Wood thrush	Hylocichla mustelina
Blue-gray gnatcatcher	Polioptila caerulea
Red-eyed vireo	Vireo olivaceus
Black-and-white warbler	Mniotilta varia
Yellow warbler	Dendroica petechia
Ovenbird	Seiurus aurocapillus
American redstart	Setophaga ruticilla
Scarlet tanager	Piranga olivacea
Cardinal	Richmondena cardinalis
Song sparrow	Melospiza melodia

Mammals:

Eastern chipmunk	Tamias striatus
Whitetail deer	Odocoileus virginianus

D = Declining species

T = Threatened species

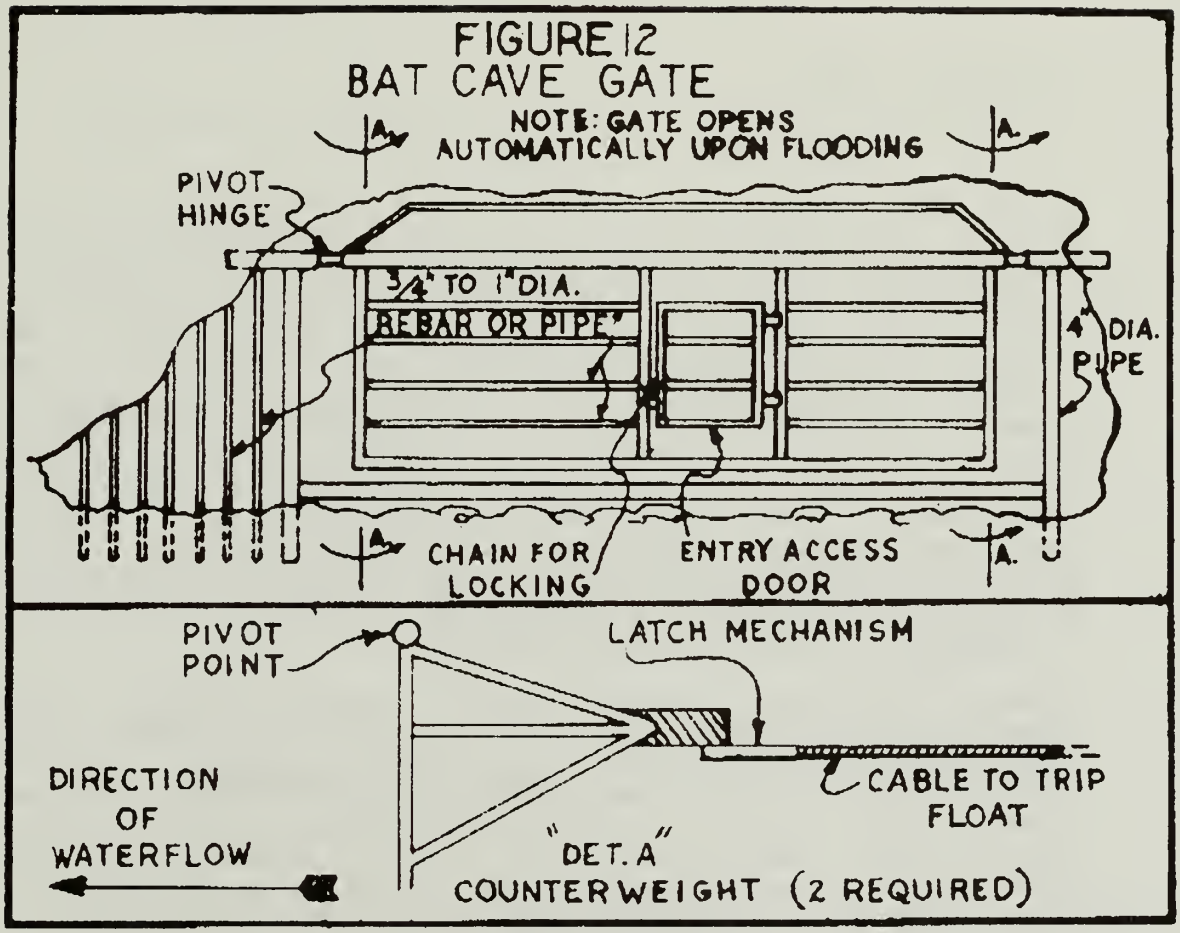

A figure from Cave Gating by Geoffrey Hunt and Robert Stitt illustrates horizontal bars.

The automatic device for flooding is unnecessary for the Pahaquarry mine entrances.

PAHAQUARRY MINES.

General Description.

Except for the immediate shore along the Delaware River, most of this site was not surveyed in 1985 because of time constraints. The Pahaquarry Mines area consists largely of an old mining site, with the remains of concrete buildings, outbuildings, tailing piles, old stream impoundments, and two mine shafts which are partially sealed with timber. An un-named stream transects the site, flowing mostly through a steep, rocky gorge and eventually emptying into the Delaware River, nearby. An un-marked trail passes through the area along the stream, and a larger marked trail skirts along high ground at the south of the area's boundary. Terrain away from the mine buildings is rocky and quite scenic, and is heavily used by hikers. There is an unpaved parking area on the west side of Old Mine Road which is also heavily used by fishermen, hikers, and picnickers.

Trees in the area consist largely of sugar maples, with lesser numbers of American elm, silver maple, black and green ashes, yellow birch, and eastern hemlock. Trees in the vicinity of the mine buildings consist mainly of young growth. There is an often dense planting of autumn olive in the disturbed area between the mine buildings and Old Mine Road. Shrub vegetation in less disturbed wooded areas is often sparse, consisting of saplings, striped maple, basswood, rhododendron, Japanese barberry, purple-flowering raspberry (in openings), and spicebush. Typical herbs here include marginal and intermediate wood ferns, Christmas fern, heart-leaved and white wood asters, Virginia jumpseed, Virginia waterleaf, two-leaved toothwort, blackberry species, clearweed, enchanter's nightshade, horseweed, and several common sedge species. The portion of the stream between Old Mine Road and the Delaware River is overgrown with an occasionally dense growth of poison ivy, hayscented fern, Japanese barberry, and horseweed.

Species of Potential Occurrence.

<u>Botrychium oniedense</u> Blunt-lobed Grape Fern

Heritage Program Rank: G3? S.

Other Listings: None.

Comments: Occurs near the Recreation Area in habitat similar to that present on the site.

Gymnocarpium dryopteris — Oak Fern

Heritage Program Rank: G4 S3.

Other Listings: None.

Comments: Historic records from nearby, in habitat similar to that present on the site.

Thelypteris phegopteris — Long Beech Fern

Heritage Program Rank: G5 S2.

Other Listings: None.

Comments: Occurs elsewhere in the Recreation Area in habitat similar to that present on the site.

Poa languida — Drooping Bluegrass

Heritage Program Rank: G3G4 S2.

Other Listings: None.

Comments: There are current records for this species in the Recreation Area, in habitat similar to that present on the site.

Carex leptonervia — Finely-nerved Sedge

Heritage Program Rank: G5 S1.

Other Listings: State Endangered.

Comments: Currently known from a locale in the DWGNRA, in habitat similar to that present on the study site.

Coeloglossum viride — Long-bracted Green Orchid

Heritage Program Rank: G5 S2.

Other Listings: None.

Comments: Seen by the author in 1990, approximately 1.5 miles northeast of Pahaquarry Mines, in habitat similar to that present on the study site.

Platanthera psycodes — Purple-fringed Orchid

Heritage Program Rank: G5 S3.

Other Listings: None.

Comments: Seen in 1982 (though not since) along nearby Van Campen's Brook, in habitat similar to that present on the study site.

Cardamine diphylla — Two-leaved Toothwort

Heritage Program Rank: G5 S3.

Other Listings: None.

Comments: Known from twelve streamside locations in the Recreation Area, in habitat similar to that found on the study site.

Dirca palustris — Leatherwood

Heritage Program Rank: G4 S2.

Other Listings: None.

Comments: Occurs in several sites in the Recreation Area, in habitat similar to that present on the study area.

Panax quinquefolius — American Ginseng

Heritage Program Rank: G4 S2.

Other Listings: Federal Category C3.

Comments: Currently known elsewhere in the Recreation Area, in habitat similar to that present on the study site.

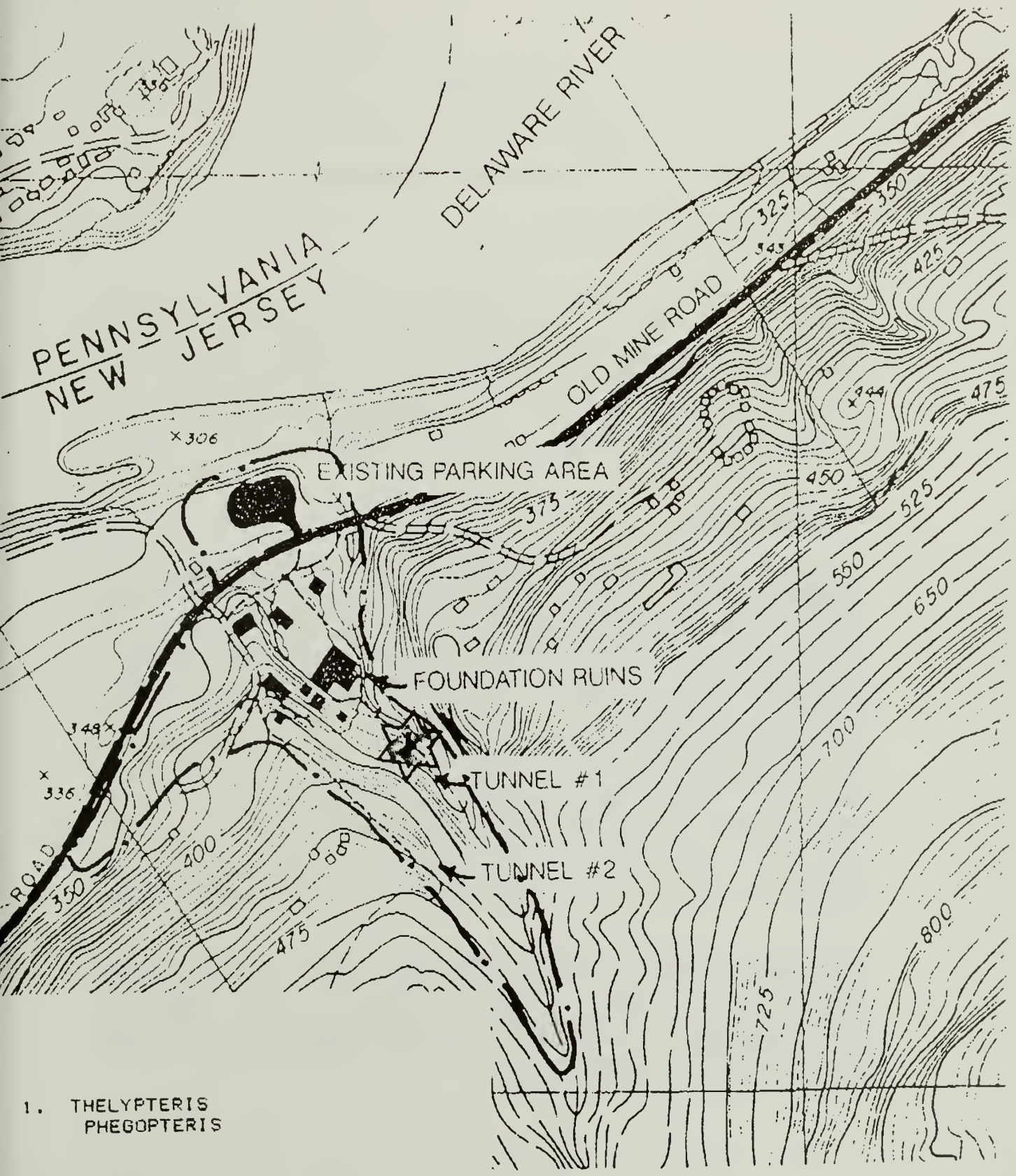

1. THELYPTERIS
PHEGOPTERIS

PAHAQUARRY MINES

NO SCALE

DEWA PKG 264AB

RESULTS OF SURVEY AND MANAGEMENT RECOMMENDATIONS

DUNFIELD CREEK DEVELOPMENT SITE

No Rare, Imperiled, or Critically Imperiled plant species were found at the Dunfield Creek Development Site, or in its immediate vicinity. One small population of American Ginseng (Panax quinquefolius, Heritage Program Ranked G4 S3) was found along the Appalachian Trail above the site (see map). This population is some distance away from the parking area, and though it is vulnerable to trampling and picking by hikers, expansion of the parking area is unlikely to have any effect on it.

PAHAQUARRY MINES

A small population of Long Beech Fern (Thelypteris hexagonoptera, Heritage Program Ranked G5 S2) was found along the small stream which passes through the site. The ferns, numbering approximately thirty plants, were located along the trail which passes immediately south of the stream and terminates at Tunnel #1 (see map). Under current use, this population is highly vulnerable to foot traffic and erosion. Expansion of this trail in any way would have a deleterious effect on Long Beech Fern at this location, particularly because the steepness of the terrain above it would preclude trail re-routing. Because of historic mining and foot traffic, erosion is already a problem here, and during heavy rains water-borne silt passes over the plants and into the stream. If feasible, hikers should be encouraged to use the larger marked trail which passes above Pahaquarry Mines on the high ground to the south of the area.

No other listed plant species were found on the site. Vegetation around the old foundations and the parking area consist of common, often disturbed site species. Development in these areas is unlikely to have any effect on Rare, Threatened, or Endangered plant populations, though efforts should be made to minimize construction-related silt runoff into the Delaware River.

S2 = Important in State because of rarity or because of vulnerability to extinction due to some biological or man-made factor

APPENDIX K

Additional Historic Photographs

The Quarry Ca. 1905
Courtesy of Keith Deshler, Belvidere, New Jersey

Upper Part of Mine Brook Showing Water Pipe Ca. 1905
Courtesy of Keith Deshler, Belvidere, New Jersey

Weber 3-Cylinder Gas Engine 1909
Courtesy of Keith Deshler, Belvidere, New Jersey

This engine was hauled on skids for seven miles to the mill.

Weber 3-Cylinder Gas Engine 1909
Courtesy of Keith Deshler, Belvidere, New Jersey

This engine was hauled on skids for seven miles to the mill.

The Ore Bin and Tramway Track Ca. 1909
Courtesy of Keith Deshler, Belvidere, New Jersey

View of the Delaware River and Tramway Tracks
from Near the Tipple Ca. 1910
Courtesy of the Delaware Water Gap National Recreation Area

The Courtright house is visible just left of center. The Pumphouse appears just to the left of the Courtright house. The Office Building can be seen just below the Pumphouse while the Ore Bin above the Mill appears at the lower left side of the photo.

View of the Delaware River from the area
near the Tipple Ca. 1910
Courtesy of the Delaware Water Gap National Recreation Area

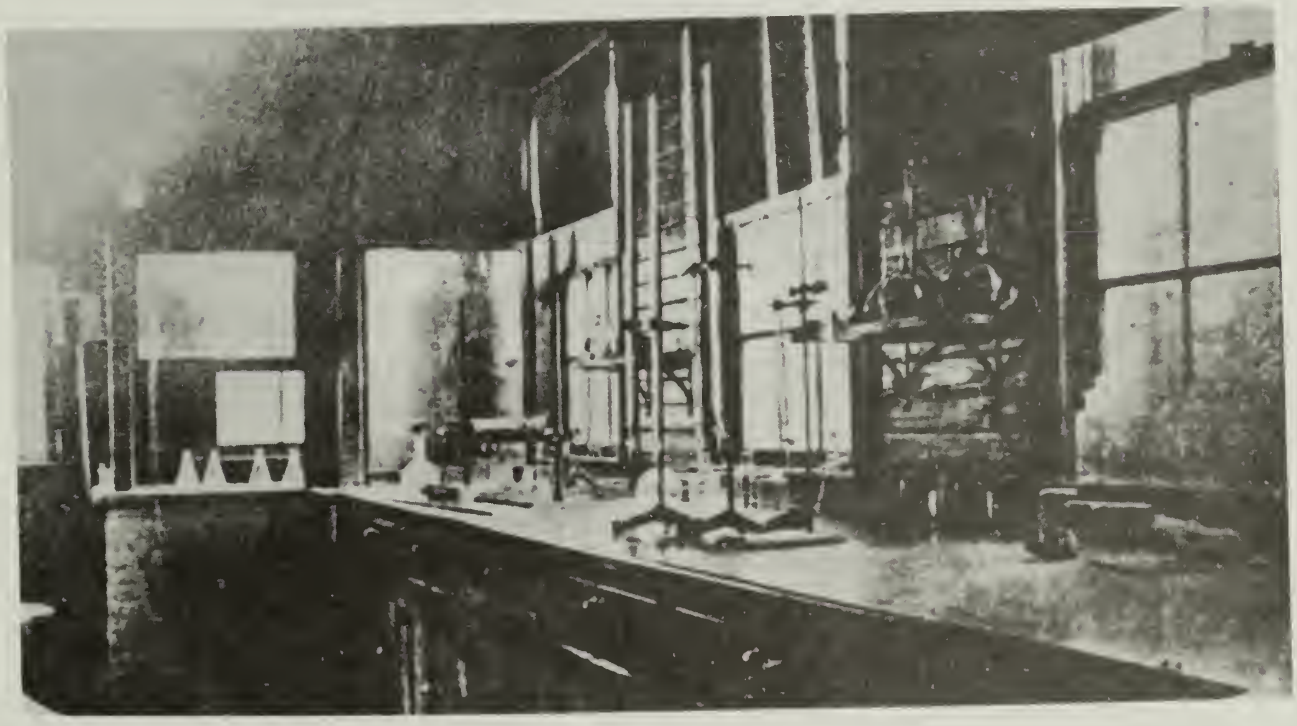

The Laboratory Interior Ca. 1910
Courtesy of Pat Fishler, Bangor, Pennsylvania

MAIN POWER PLANT (14)

This consisted of a 3 cylinder 350HP Gas Engine made by Weber Gas Eng. Co of Kansas City, Mo. It was started by compressed air. It used producer gas as fuel made in twin Weber gas producers (15) from buckwheat coal.

This gas was also used as was fuel oil unsuccessfully in firing the ore roasting furnaces at one time.

Originally the plant was driven by a line shaft from the Engine by two 30 in. rubber belts. Later the engine was direct connected to a Crocker-Wheeler 750 K.V. alternater with individual motors in each section.

AUXILIARY POWER PLANT. (14)

This consisted of a Fairbanks-Morse single cylinder gasoline engine belted to a Crocker-Wheeler direct current generator for driving two Gardner Electric Rock drills in the quarry.

Also used for driving Curtis Air Compressor for compressed air for starting the main power plant.

This generator & compressor driven by the main plant when it was operating.

Explanation of the Power Supply written by
Walter Deshler in 1961
Courtesy of the Delaware Water Gap National Recreation Area

WATER SUPPLY (18)

The supply was from a dam across Mine Brook up the ravine which was not adequate in dry spells so they installed an Aldrich Triplex Electric Pump in a pump house near the river and pumped to a 13000 Gal. tank above the mill. This tank was always full due to an auto-matic float switch that con-trolled the pump.

HEAT.

Steam heat was supplied by a 60 HP. vertical boiler in the Blacksmith Shop. Fuel was soft coal or cord wood.

Explanation of the Water Supply and Heat
written by Walter Deshler in 1961
Courtesy of the Delaware Water Gap National Recreation Area

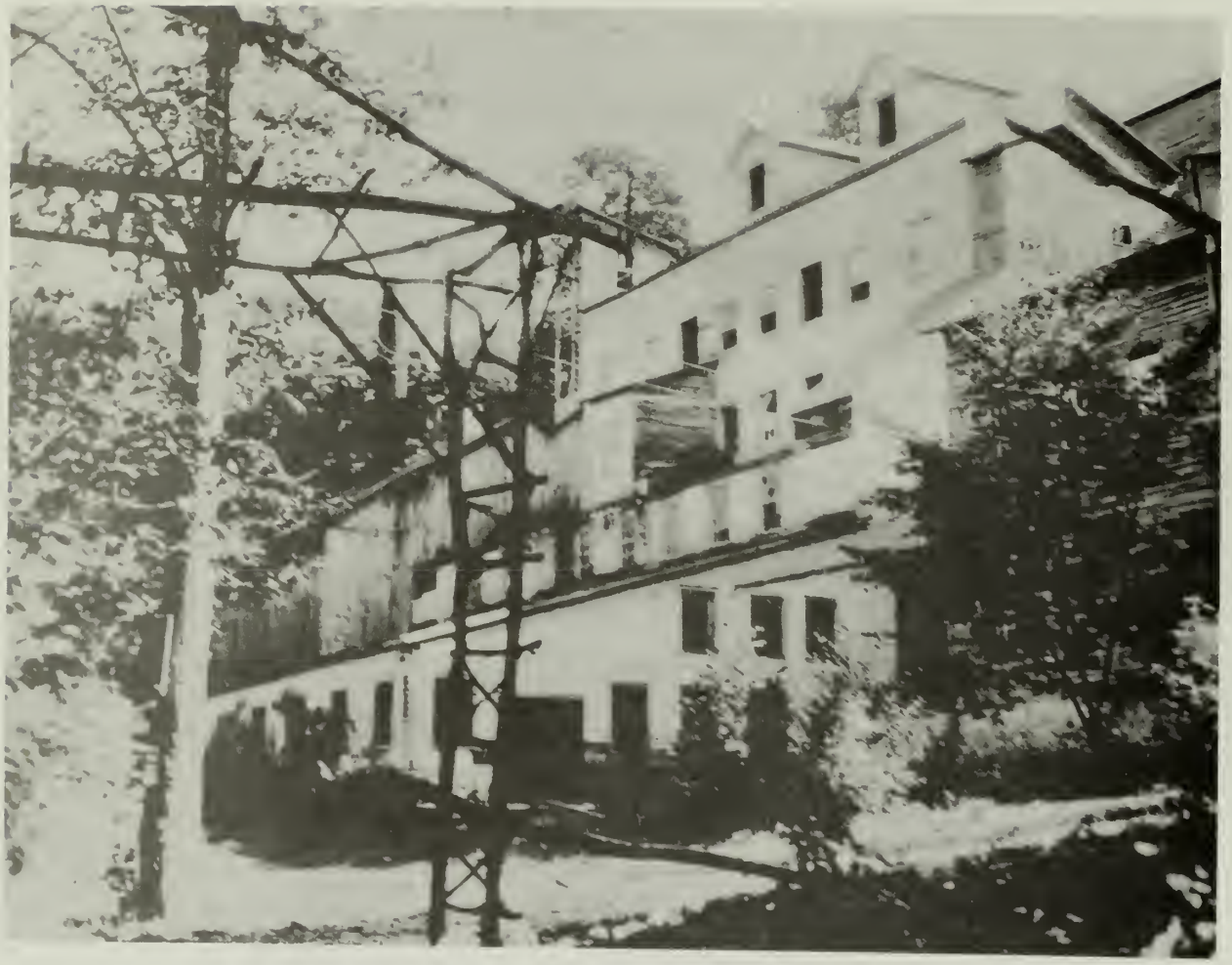

The Mill in 1928
Courtesy of Don Pace, Easton, Pennsylvania

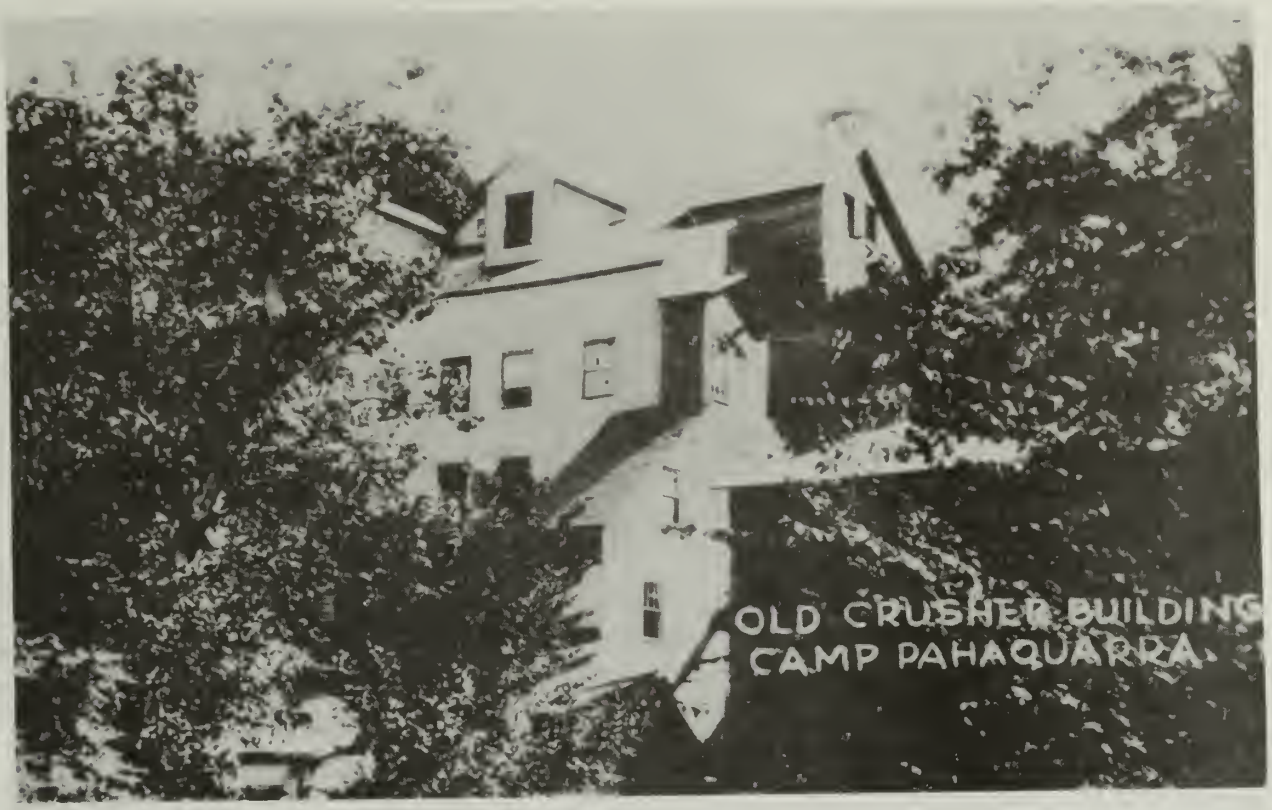

The Mill in 1928
Courtesy of Don Pace, Easton, Pennsylvania

The Mill Ca. 1930
Courtesy of Don Pace, Easton, Pennsylvania

The gas producer and electrical generation area of the mill on the right was re-sided to serve as the first Boy Scout mess hall.

The Mining Era Office Building in 1928
Courtesy of Don Pace, Easton, Pennsylvania

The Oil House is visible to the right rear of the Office Building.

A Second Copper Ingot from the 1901-12 Mining Era
Owned by Keith Deshler of Belvidere, New Jersey
Courtesy of Don Pace, Easton, Pennsylvania

The Storage House 1970s
Courtesy of Don Pace, Easton, Pennsylvania

The Quarry 1970s
Courtesy of Don Pace, Easton, Pennsylvania

The Quarry 1970s
Courtesy of Don Pace, Easton, Pennsylvania

The Mine Era Boarding House Ca. 1960s Adapted
for the Boy Scout Chief Ranger's Quarters
Courtesy of Don Pace, Easton, Pennsylvania

Boarding House Site 1970s
Courtesy of Don Pace, Easton, Pennsylvania

Small Adit Near Site of Boy Scout Chapel 1960s
Courtesy of Don Pace, Easton, Pennsylvania

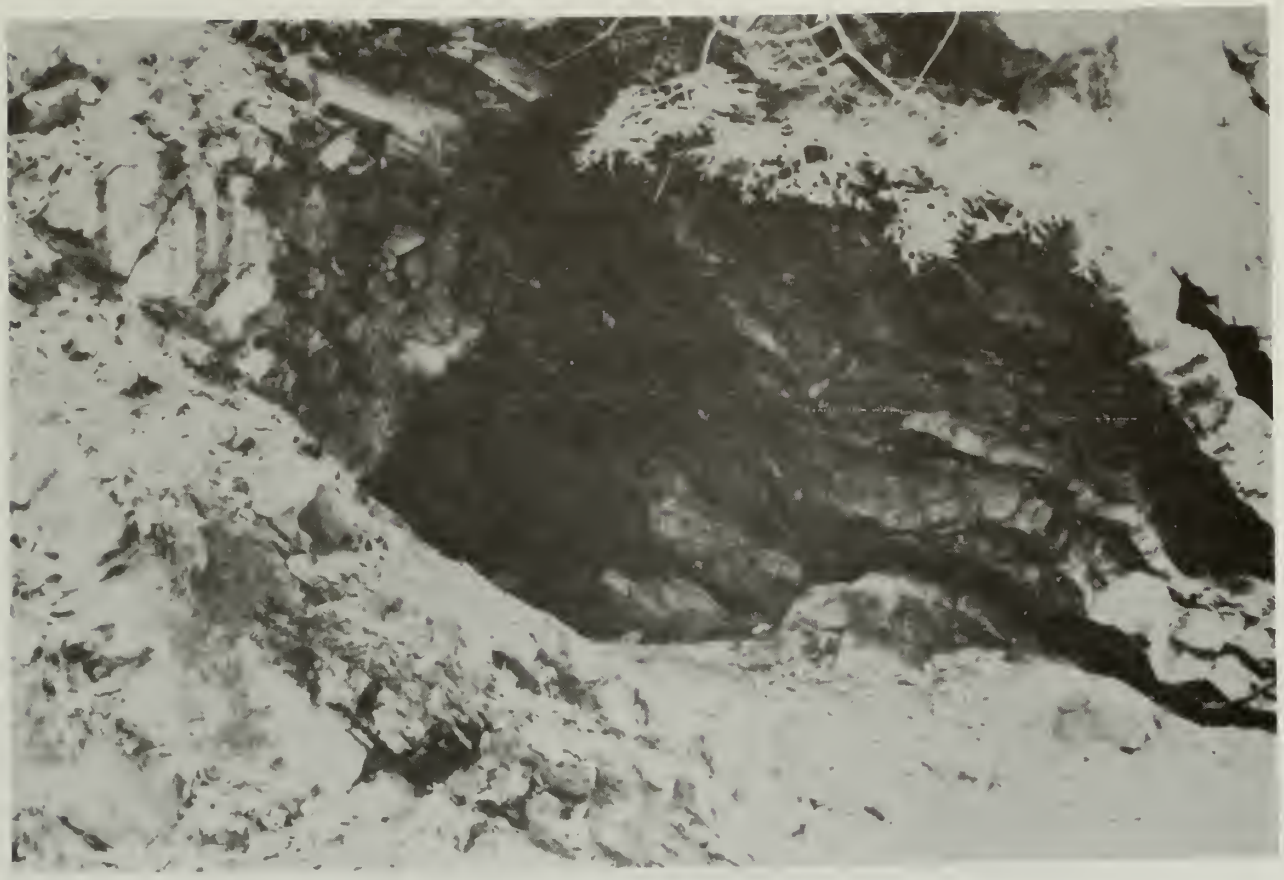

Adit Number 1 1970s
Courtesy of Don Pace, Easton, Pennsylvania

Mill Walls 1970s
Courtesy of Don Pace, Easton, Pennsylvania

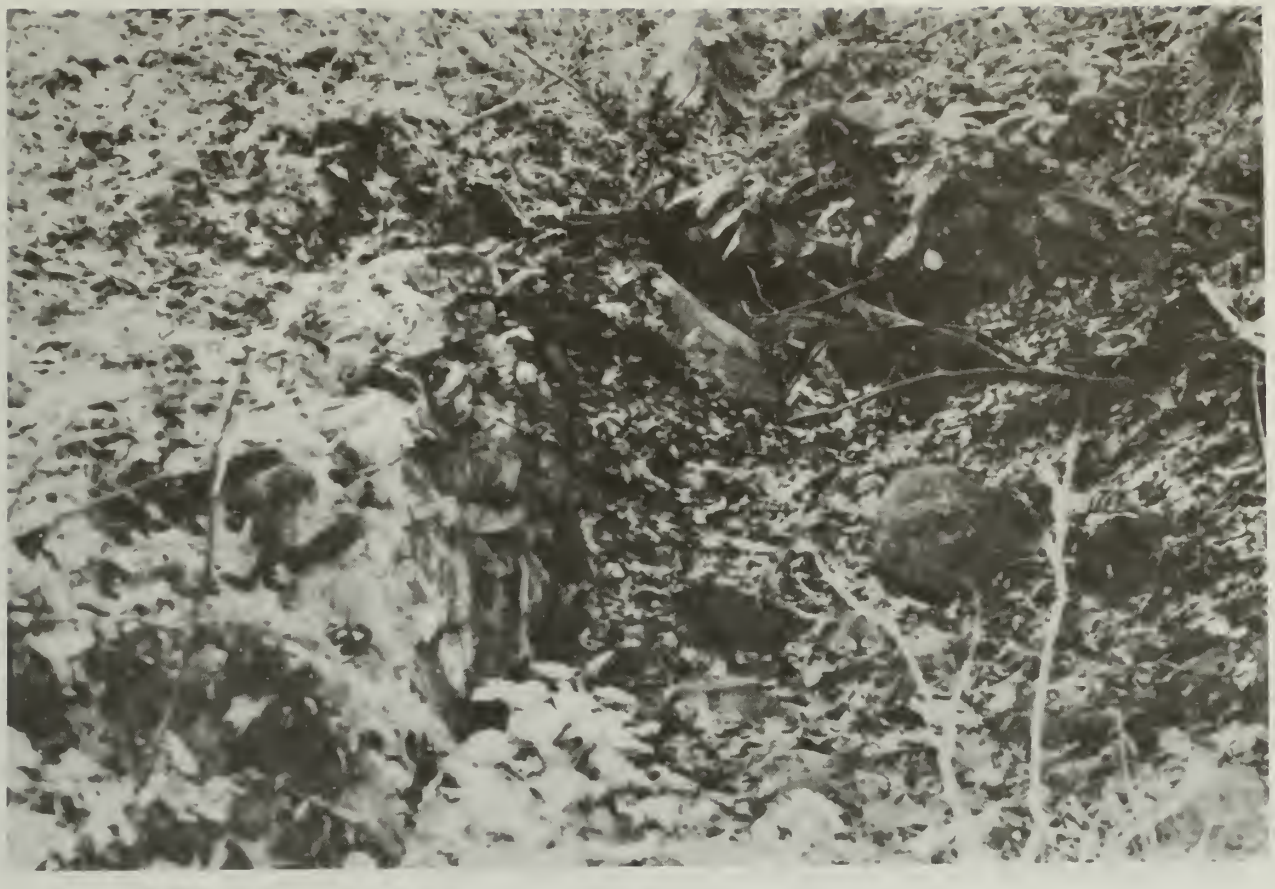

Stone Wall at "New Adit" Entrance 1970s
Courtesy of Don Pace, Easton, Pennsylvania

Small Prospect Hole Above Adit Number 2 1970s
Courtesy of Don Pace, Easton, Pennsylvania

Small Prospect Hole Above Adit Number 2 1970s
Courtesy of Don Pace, Easton, Pennsylvania

Adit Across Mine Brook in Line with Adit Number 1 1970s
Courtesy of Don Pace, Easton, Pennsylvania

Inside Adit Number 1 1970s
Courtesy of Don Pace, Easton, Pennsylvania

View from the Top of the Ridge Near the Tipple 1970s
Courtesy of Don Pace, Easton, Pennsylvania

Agricultural Stabilization and Conservation Service
Aerial Overflight Photograph AQW-60-35
May 4, 1939
Record Group 145, Records of the Agricultural
Stabilization And Conservation Service,
National Archives and Record Center,
Washington, D.C.

Agricultural Stabilization and Conservation Service
Aerial Overflight Photograph AQW-80-59
May 31, 1939
Record Group 145, Records of the Agricultural
Stabilization and Conservation Service,
National Archives and Record Center,
Washington, D.C.

•U.S. GOVERNMENT PRINTING OFFICE: 1995-676-877/25126

Clemson University
3 1604 011 357 169

FINAL
PUBLICATION

As the nation's principal conservation agency, the Department of the Interior has responsibility for most of our nationally owned public lands and natural resources. This includes fostering wise use of our land and water resources, protecting our fish and wildlife, preserving the environmental and cultural values of our national parks and historical places, and providing for the enjoyment of life through outdoor recreation. The department assesses our energy and mineral resources and works to ensure that their development is in the best interests of all our people. The department also promotes the goals of the Take Pride in America campaign by encouraging stewardship and citizen responsibility for the public lands and promoting citizen participation in their care. The department also has a major responsibility for American Indian reservation communities and for people who live in island territories under U.S. administration.

Publication services were provided by the Branch of Publications and Graphic Design, Denver Service Center. NPS D-178 / Volume II / September 1995